FAA APPROVED
AIRPLANE FLIGHT MANUAL

for the CIRRUS SR22T

with Continental Motors Turbocharged Engine and
Perspective Touch+ Avionics System

FAA Approved in Normal Category based on 14 CFR 23. This document must be carried in the airplane at all times and be kept within the reach of the pilot during all flight operations.

THIS MANUAL INCLUDES THE MATERIAL REQUIRED TO BE FURNISHED TO THE PILOT BY 14 CFR 23 AND ADDITIONAL INFORMATION PROVIDED BY CIRRUS AIRCRAFT AND CONSTITUTES THE FAA APPROVED AIRPLANE FLIGHT MANUAL.

Model - Serial #: Registration #:

TC ODA Administrator, ODA-834662-CE, for 12 MAR 2025

Manager, Flight Test & Human Factors Branch, AIR-710 Approved Date
Federal Aviation Administration

Copyright © 2025 - All Rights Reserved
Cirrus Aircraft
4515 Taylor Circle
Duluth, MN 55811

List of Effective Pages

Use this page to determine the current effective date for each page in the AFM. Supplements are issued individually and are controlled by the Log of Supplements Page in Section 9.

Log of Revisions

REV NO	FAA APPROVAL	DATE	SUMMARY DESCRIPTION
Original Issue	Monica Merritt Mgr., AIR-712 25 Aug 2023	01 Aug 2023	Original Issue
Revision 1	Jay Yeakle, TC ODA Administrator ODA-834662-CE 12 Mar 2025	15 Jan 2025	Added Safe Return Autoland Content Clarified propeller information.

Page	Status	Page	Status	Page	Status
CoverPage-i	Revision 1	2-11	Original Issue	3-11	Revision 1
CoverPage-ii	Revision 1	2-12	Original Issue	3-12	Revision 1
LOEP-1	Revision 1	2-13	Original Issue	3-13	Revision 1
LOEP-2	Revision 1	2-14	Original Issue	3-14	Revision 1
LOEP-3	Revision 1	2-15	Revision 1	3-15	Revision 1
LOEP-4	Revision 1	2-16	Revision 1	3-16	Revision 1
Frontmatter-1	Original Issue	2-17	Original Issue	3-17	Revision 1
Frontmatter-2	Original Issue	2-18	Original Issue	3-18	Revision 1
Frontmatter-3	Revision 1	2-19	Original Issue	3-19	Revision 1
Frontmatter-4	Original Issue	2-20	Original Issue	3-20	Revision 1
1-1	Revision 1	2-21	Revision 1	3-21	Revision 1
1-2	Revision 1	2-22	Original Issue	3-22	Revision 1
1-3	Original Issue	2-23	Revision 1	3-23	Revision 1
1-4	Original Issue	2-24	Original Issue	3-24	Revision 1
1-5	Original Issue	2-25	Original Issue	3-25	Revision 1
1-6	Original Issue	2-26	Original Issue	3-26	Revision 1
1-7	Original Issue	2-27	Revision 1	3-27	Revision 1
1-8	Revision 1	2-28	Revision 1	3-28	Revision 1
1-9	Original Issue	2-29	Revision 1	3-29	Revision 1
1-10	Original Issue	2-30	Revision 1	3-30	Revision 1
1-11	Original Issue	2-31	Revision 1	3-31	Revision 1
1-12	Original Issue	2-32	Revision 1	3-32	Revision 1
1-13	Original Issue	2-33	Revision 1	3-33	Revision 1
1-14	Original Issue	2-34	Revision 1	3-34	Revision 1
2-1	Revision 1	3-1	Revision 1	3-35	Revision 1
2-2	Revision 1	3-2	Revision 1	3-36	Revision 1
2-3	Original Issue	3-3	Revision 1	3-37	Revision 1
2-4	Original Issue	3-4	Revision 1	3-38	Revision 1
2-5	Original Issue	3-5	Revision 1	3-39	Revision 1
2-6	Original Issue	3-6	Revision 1	3-40	Revision 1
2-7	Revision 1	3-7	Revision 1	3-41	Revision 1
2-8	Original Issue	3-8	Revision 1	3-42	Revision 1
2-9	Revision 1	3-9	Revision 1	3-43	Revision 1
2-10	Original Issue	3-10	Revision 1	3-44	Revision 1

List of Effective Pages (Cont.)

Page	Status	Page	Status	Page	Status
3-45	Revision 1	3A-47	Revision 1	5-13	Original Issue
3-46	Revision 1	3A-48	Revision 1	5-14	Original Issue
3-47	Revision 1	4-1	Revision 1	5-15	Original Issue
3-48	Revision 1	4-2	Revision 1	5-16	Original Issue
3-49	Revision 1	4-3	Original Issue	5-17	Original Issue
3-50	Revision 1	4-4	Revision 1	5-18	Original Issue
3-51	Revision 1	4-5	Revision 1	5-19	Original Issue
3-52	Revision 1	4-6	Revision 1	5-20	Original Issue
3-53	Revision 1	4-7	Revision 1	5-21	Original Issue
3-54	Revision 1	4-8	Revision 1	5-22	Original Issue
3A-1	Revision 1	4-9	Revision 1	5-23	Original Issue
3A-2	Revision 1	4-10	Revision 1	5-24	Original Issue
3A-3	Revision 1	4-11	Revision 1	5-25	Original Issue
3A-4	Revision 1	4-12	Revision 1	5-26	Revision 1
3A-5	Original Issue	4-13	Revision 1	5-27	Revision 1
3A-6	Original Issue	4-14	Revision 1	5-28	Revision 1
3A-7	Original Issue	4-15	Revision 1	5-29	Revision 1
3A-8	Original Issue	4-16	Revision 1	5-30	Revision 1
3A-9	Original Issue	4-17	Revision 1	5-31	Revision 1
3A-10	Revision 1	4-18	Revision 1	5-32	Revision 1
3A-11	Revision 1	4-19	Revision 1	5-33	Revision 1
3A-12	Revision 1	4-20	Revision 1	5-34	Original Issue
3A-13	Revision 1	4-21	Revision 1	5-35	Original Issue
3A-14	Revision 1	4-22	Revision 1	5-36	Original Issue
3A-15	Revision 1	4-23	Revision 1	5-37	Original Issue
3A-16	Revision 1	4-24	Revision 1	5-38	Original Issue
3A-17	Revision 1	4-25	Revision 1	5-39	Original Issue
3A-18	Revision 1	4-26	Revision 1	5-40	Original Issue
3A-19	Revision 1	4-27	Revision 1	5-41	Original Issue
3A-20	Revision 1	4-28	Revision 1	5-42	Original Issue
3A-21	Revision 1	4-29	Revision 1	5-43	Original Issue
3A-22	Revision 1	4-30	Revision 1	5-44	Original Issue
3A-23	Revision 1	4-31	Revision 1	5-45	Original Issue
3A-24	Revision 1	4-32	Revision 1	5-46	Original Issue
3A-25	Revision 1	4-33	Revision 1	5-47	Original Issue
3A-26	Revision 1	4-34	Revision 1	5-48	Original Issue
3A-27	Revision 1	4-35	Revision 1	5-49	Original Issue
3A-28	Revision 1	4-36	Revision 1	5-50	Original Issue
3A-29	Revision 1	4-37	Revision 1	5-51	Original Issue
3A-30	Revision 1	4-38	Revision 1	5-52	Original Issue
3A-31	Revision 1	4-39	Revision 1	5-53	Original Issue
3A-32	Revision 1	4-40	Revision 1	5-54	Original Issue
3A-33	Revision 1	4-41	Revision 1	5-55	Original Issue
3A-34	Revision 1	4-42	Revision 1	5-56	Original Issue
3A-35	Revision 1	5-1	Original Issue	5-57	Original Issue
3A-36	Revision 1	5-2	Original Issue	5-58	Original Issue
3A-37	Revision 1	5-3	Original Issue	5-59	Original Issue
3A-38	Revision 1	5-4	Original Issue	5-60	Original Issue
3A-39	Revision 1	5-5	Original Issue	5-61	Original Issue
3A-40	Revision 1	5-6	Original Issue	5-62	Original Issue
3A-41	Revision 1	5-7	Original Issue	5-63	Original Issue
3A-42	Revision 1	5-8	Original Issue	5-64	Original Issue
3A-43	Revision 1	5-9	Original Issue	5-65	Original Issue
3A-44	Revision 1	5-10	Original Issue	5-66	Original Issue
3A-45	Revision 1	5-11	Original Issue	5-67	Original Issue
3A-46	Revision 1	5-12	Original Issue	5-68	Original Issue

List of Effective Pages (Cont.)

Page	Status	Page	Status	Page	Status
6-1	Original Issue	10-9	Revision 1		
6-2	Original Issue	10-10	Revision 1		
6-3	Original Issue				
6-4	Original Issue				
6-5	Original Issue				
6-6	Original Issue				
6-7	Original Issue				
6-8	Original Issue				
6-9	Original Issue				
6-10	Original Issue				
6-11	Original Issue				
6-12	Original Issue				
7-1	Original Issue				
7-2	Original Issue				
8-1	Revision 1				
8-2	Revision 1				
8-3	Original Issue				
8-4	Revision 1				
8-5	Original Issue				
8-6	Original Issue				
8-7	Original Issue				
8-8	Original Issue				
8-9	Original Issue				
8-10	Original Issue				
8-11	Original Issue				
8-12	Revision 1				
8-13	Revision 1				
8-14	Revision 1				
8-15	Revision 1				
8-16	Revision 1				
8-17	Revision 1				
8-18	Revision 1				
8-19	Revision 1				
8-20	Revision 1				
8-21	Revision 1				
8-22	Revision 1				
8-23	Revision 1				
8-24	Revision 1				
8-25	Revision 1				
8-26	Revision 1				
8-27	Revision 1				
8-28	Revision 1				
8-29	Revision 1				
8-30	Revision 1				
8-31	Revision 1				
8-32	Revision 1				
8-33	Revision 1				
8-34	Revision 1				
9-1	Original Issue				
9-2	Original Issue				
10-1	Revision 1				
10-2	Revision 1				
10-3	Original Issue				
10-4	Original Issue				
10-5	Revision 1				
10-6	Revision 1				
10-7	Revision 1				
10-8	Revision 1				

List of Effective Pages (Cont.)

Page	Status	Page	Status	Page	Status

Intentionally Left Blank

SR22T Airplane Flight Manual (AFM)

Temporary Change

Information in this Temporary Change adds to, supersedes, or deletes information in the Airplane Flight Manual.

Affected Publications:	SR22T Airplane Flight Manual: • P/N 44767-001 Revision 1 **(FAA Approved)**
Filing Instructions:	Remove existing pages 4-7 thru 4-10 and discard. Insert the following pages after page 4-6.
Purpose:	This AFM Temporary Change restores content in the Normal Procedures section.

Affected Sections:

- Section 4 - Normal Procedures
  - Preflight Inspection

TC ODA Administrator, ODA-834662-CE, for
Manager, Flight Test & Human Factors Branch, AIR-710
Federal Aviation Administration

11 June 2025
Approved Date

Intentionally Left Blank

SR22T Airplane Flight Manual (AFM)

Temporary Change

Information in this Temporary Change adds to, supersedes, or deletes information in the Airplane Flight Manual.

Affected Publications:	SR22T Airplane Flight Manual: • P/N 44767-001 Revision 1 **(FAA Approved)**
Filing Instructions:	Remove existing pages 3-39, 3-40, 3A-17 thru 3A-20, 3A-33, 3A-34 and discard. Insert the following replacement pages as required.
Purpose:	Add content to Emergency and Abnormal Procedures.

Affected Sections:

- Section 3 - Emergency Procedures
  - ESSENTIAL BUS VOLTS Warning
- Section 3A - Emergency Procedures
  - ALTERNATOR 1 CURRENT Caution
  - BATTERY 1 CURRENT Caution
  - MAIN BUS 1 Caution

Jay Yeable *TC ODA Administrator, ODA-834662-CE, for* 13 NOV 2025

Manager, Flight Test & Human Factors Branch, AIR-710
Federal Aviation Administration

Approved Date

Intentionally Left Blank

SR22T Airplane Flight Manual (AFM)

Temporary Change

Information in this Temporary Change adds to, supersedes, or deletes information in the Airplane Flight Manual.

Affected Publications:	SR22T Airplane Flight Manual: • P/N 44767-001 Revision 1 **(FAA Approved)**
Filing Instructions:	Insert the following changes adjacent to the first page of each affected AFM section and retain until further notice. Insert this cover page adjacent to the last page of the List of Effective Pages and retain until further notice.
Purpose:	This AFM Temporary Change revises fire extinguisher information in affected sections.

Affected Sections:

- Section 3 - Emergency Procedures
  - Cabin Fire in Flight

TC ODA Administrator, ODA-834662-CE, for
Manager, Flight Test & Human Factors Branch, AIR-710
Federal Aviation Administration

02 DEC 2025
Approved Date

Intentionally Left Blank

Foreword

This Airplane Flight Manual (AFM) has been prepared by Cirrus to familiarize operators with the aircraft. Read this AFM carefully. It provides operational procedures that will ensure the operator obtains the performance published in the manual, data designed to allow the most efficient and safe use of the airplane, and basic information to assist in maintaining the airplane in airworthy condition.

• NOTE •

All limitations, procedures, maintenance & servicing requirements, and performance data contained in this AFM are mandatory for compliance with FAA operating rules and for continued airworthiness of the airplane.

This AFM includes the material required to be furnished to the pilot by the Code of Federal Regulations (CFRs) and additional information provided by Cirrus and constitutes the FAA Approved Airplane Flight Manual for the aircraft.

The Airplane Flight Manual

This AFM has been prepared using GAMA Specification #1 for Airplane Flight Manual, Revision 2, dated 18 October 1996 as the content model and format guide. However, some deviations from this specification were made for clarity. The AFM is presented in loose-leaf form for ease in inserting revisions and is sized for convenient storage. Tabbed dividers throughout the AFM allow quick reference to each section. Logical and convenient Tables of Contents are located at the beginning of each section to aid in locating specific data within that section. The AFM is divided into ten sections as follows:

Section 1 ..... General
Section 2 ..... Limitations
Section 3 ..... Emergency Procedures
Section 3A ..... Abnormal Procedures
Section 4 ..... Normal Procedures
Section 5 ..... Performance Data
Section 6 ..... Weight and Balance
Section 7 ..... Systems Description
Section 8 ..... Handling and Servicing
Section 9 ..... Log of Supplements
Section 10 ..... Safety Information

The data presented in this AFM is the result of extensive flight tests and is approved by the Federal Aviation Administration. However, as new procedures or performance data are developed, the AFM will be revised.

• **NOTE** •

It is the responsibility of the owner to ensure that the Airplane Flight Manual is current at all times. Therefore, it is very important that all revisions be properly incorporated into this AFM as soon as they become available.

Revising the Airplane Flight Manual

Two types of revisions may be issued for this manual: Temporary and Numbered.

Temporary revisions are printed on yellow paper, normally cover only one topic or procedure, and are issued to provide safety related information in a timely manner. All the information needed to properly file a temporary revision is included on the revision itself. Typically, a temporary revision is superseded and replaced by the next numbered revision.

Numbered revisions are printed on white paper, normally cover several subjects, and are issued as general updates to the AFM. Each numbered revision includes an “Instruction Sheet”, a “List of Effective Pages”, and a “Revision Highlights” page. The “Instruction Sheet” is intended to assist the manual holder in removing superseded pages and inserting new or superseding pages. The “List of Effective Pages” shows the issue or revision status of all pages in the AFM. The “Revision Highlights” page gives a brief description of changes made to each page in the current revision.

Identifying Revised Material

Each page in the AFM has the issue date at the lower inside corner opposite the page number and the revision level under the part number. Issue dates will correspond to the issue dates of the Original Issue, any revisions, or reissues on the List of Effective Pages. The Original Issue and its issue date will be listed on the List of Effective Pages. In the event that the majority of pages in the AFM are revised, Cirrus may determine that it is more effective to reissue the AFM. Reissues will be identified by the word “Reissue” followed by a letter indicating the reissue level; for example, “Reissue A” on the List of Effective Pages along with its issue date. Revisions will be identified by the word “Revision” followed by the revision number on the List of Effective Pages; for example, “Revision 2” (Original Issue, Revision 2) or “Revision B1” (Reissue B, Revision 1).

Revised material on a page can be identified by a change bar located at the outside page margin.

Revisions to the Airplane Flight Manual

AFM revisions, temporary revisions, and supplements can be downloaded from Cirrus at www.cirrusaircraft.com.

Paper copies of AFM revisions and supplements can be purchased from Cirrus Connection at www.cirrusaircraft.com.

Supplements

The Supplements section (Section 9) of this AFM contains FAA Approved Supplements necessary to safely and efficiently operate the airplane when equipped with optional equipment not provided with the standard airplane or not included in the AFM. Supplements are essentially "mini-manuals" and may contain data corresponding to most sections of the AFM. Data in a supplement either adds to, supersedes, or replaces similar data in the basic AFM.

Section 9 includes a "Log of Supplements" page preceding all Cirrus Supplements produced for this airplane. The "Log of Supplements" page can be utilized as a "Table of Contents" for Section 9. If the airplane is modified at a non-Cirrus facility through an STC or other approval method, it is the owner's responsibility to ensure that the proper supplement, if applicable, is installed in the AFM and that the supplement is properly recorded on the "Log of Supplements" page.

FAA Approved AFM Supplements must be in the airplane for flight operations when the subject optional equipment is installed or the special operations are to be performed.

Retention of Data

In the event a new title page is issued, the weight and balance data changes, the equipment list changes, or the "Log of Supplements" is replaced, the owner must ensure that all information applicable to the airplane is transferred to the new pages and the aircraft records are current. It is not a requirement that owners retain information, such as supplements, that is not applicable to their airplane.

In the event a new AFM is purchased, the owner must ensure that all information applicable to the airplane is transferred to the new AFM and the aircraft records are current.

Warnings, Cautions, and Notes

Warnings, Cautions, and Notes are used throughout this AFM to focus attention on special conditions or procedures as follows:

• WARNING •

Warnings are used to call attention to operating procedures which, if not strictly observed, may result in personal injury or loss of life.

• CAUTION •

Cautions are used to call attention to operating procedures which, if not strictly observed, may result in damage to equipment.

• NOTE •

Notes are used to highlight specific operating conditions or steps of a procedure.

Airplane Serial Number Effectivity

For aircraft serial numbers with an alphabetical suffix, the letter designation should be ignored when reading effectivity notes in service and operating documents.

For example, "2491H" is the same as "2491" when referencing effectivity to determine applicable operation for this aircraft.

Section 1: General

Table of Contents

Introduction 3
The Airplane 7
Engine 7
Propeller 7
Hartzell 7
Fuel 7
Approved Fuel Grades 7
Oil 8
Maximum Certificated Weights 8
Specific Loadings 8
Terminology 9

Intentionally Left Blank

Introduction

This section contains information of general interest to pilots and owners. You will find the information useful in acquainting yourself with the airplane, as well as in loading, fueling, sheltering, and handling the airplane during ground operations. Additionally, this section contains definitions or explanations of symbols, abbreviations, and terminology used throughout this Manual.

• **NOTE** •

For specific information regarding the organization of this Manual, revisions, supplements, and procedures to be used to obtain publications, see the "Foreword" section.

All liquid volumes referenced in this publication are expressed in United States Customary Units, e.g., U.S. Gallons.

Figure 1-1: Airplane Three View

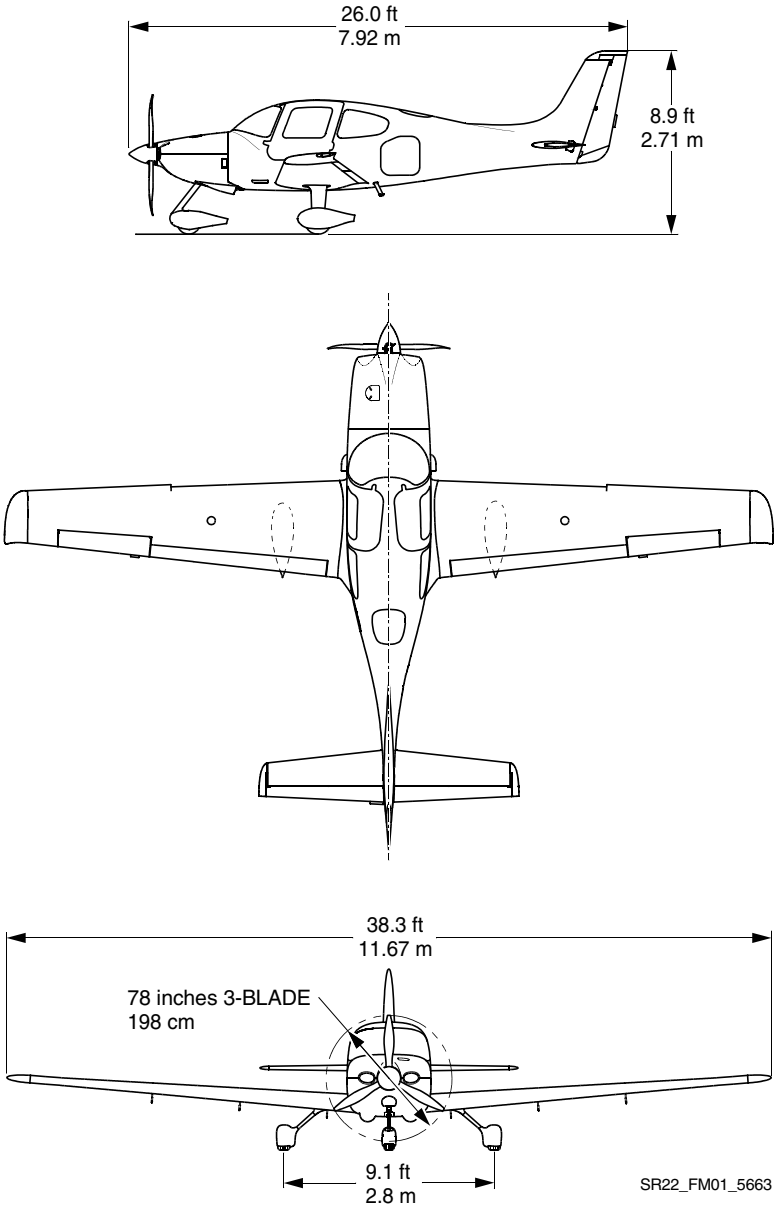

Figure 1-2: Airplane Interior Dimensions

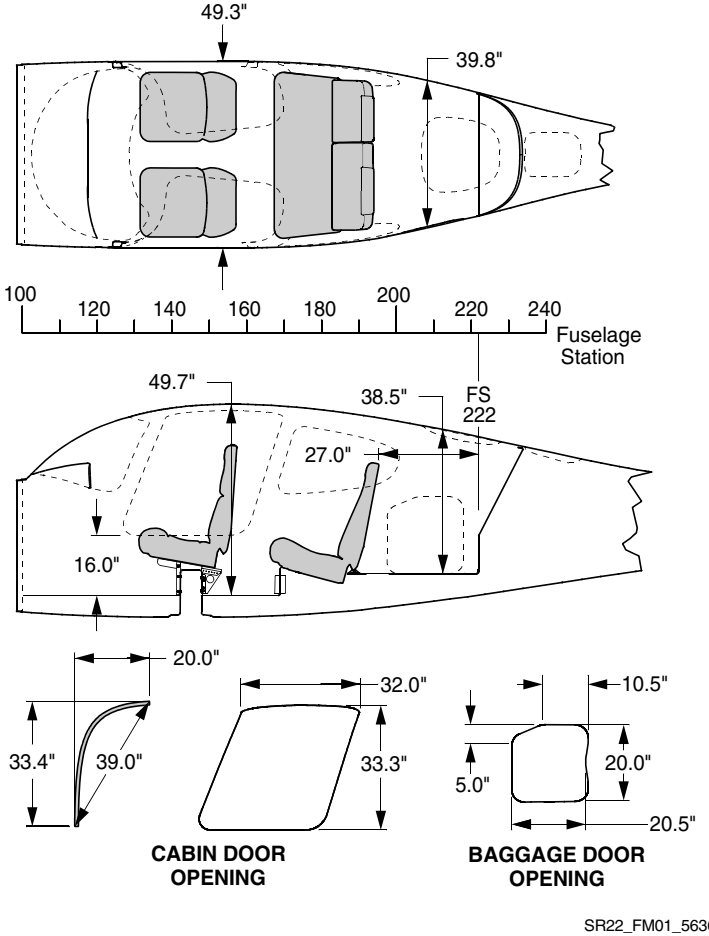

Location	Length	Width	Height	Volume
Cabin	122”	49.3”	49.7”	137 cu ft
Baggage Compartment	36”	39.8”	38.5”	32 cu ft

Figure 1-3: Turning Radius

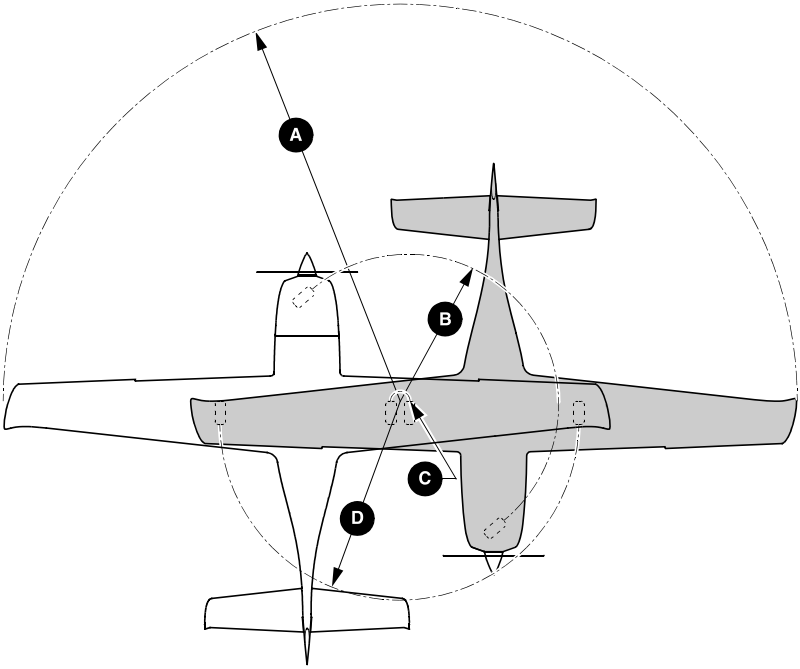

GROUND TURNING CLEARANCE

A	RADIUS FOR WING TIP	24.3 ft.	(7.41 m)
B	RADIUS FOR NOSE GEAR	7.0 ft.	(2.16 m)
C	RADIUS FOR INSIDE GEAR	0.5 ft.	(0.15 m)
D	RADIUS FOR OUTSIDE GEAR	9.1 ft.	(2.77 m)

TURNING RADII ARE CALCULATED USING ONE BRAKE AND PARTIAL POWER. ACTUAL TURNING RADIUS MAY VARY AS MUCH AS THREE FEET.

SR22_FM01_5399

The Airplane

Engine

Number of Engines 1
Number of Cylinders ..... 6 (550 cubic inch displacement)
Engine Manufacturer .....Continental Aerospace Technologies
Engine Model TSIO-550-K
Fuel Metering .....Fuel Injected
Engine Cooling ..... Air Cooled
Engine Type..... .Turbocharged, Horizontally Opposed, Direct Drive
Horsepower Rating..... 315 bhp @ 2500 RPM

Propeller

Hartzell

Propeller Type..... Constant Speed

Three-Blade Propeller, Composite:

Model Number..... PHC-J3Y1F-1N/N7605(C)(B)[1]
Diameter ..... 78.0”

Fuel

Total Capacity .....94.5 U.S. Gallons (358.0 L)
Total Usable .....92.0 U.S. Gallons (348.0 L)

Approved Fuel Grades

100 LL Grade Aviation Fuel (Blue)
100 (Formerly 100/130) Grade Aviation Fuel (Green)

1. Parenthesis denote approved options in propeller part number.

Oil

Oil Capacity (Sump) ..... 8 U.S. Quarts (7.6 L)

Refer to Section 2, Powerplant Limitations, for approved oil grades.

Maximum Certificated Weights

Maximum Takeoff Gross Weight. ..... 3600 lb (1633 Kg)

Maximum Zero Fuel Weight ..... 3400 lb (1542 Kg)

Maximum Baggage Compartment Loading ..... 130 lb (59 kg)

Specific Loadings

Wing Loading ..... 24.8 lb per square foot

Power Loading ..... 11.4 lb per hp

Terminology

Table 1: General Airspeed Terminology

General Airspeed Terminology	
Terminology	**Definition**
KCAS	Knots Calibrated Airspeed is the indicated airspeed corrected for position and instrument error.
KIAS	Knots Indicated Airspeed is the speed shown on the airspeed indicator. The IAS values published in this AFM assume no instrument error.
KTAS	Knots True Airspeed is the airspeed expressed in knots relative to undisturbed air which is KCAS corrected for altitude and temperature.
V_G	Best Glide Speed is the speed at which the greatest flight distance is attained per unit of altitude lost with power off.
V_O	Operating Maneuvering Speed is the maximum speed at which application of full control movement will not overstress the airplane.
$V_{FE_50\%}$	Maximum Flap Extended Speed (50%) is the highest speed permissible with wing flaps extended to the 50% position (typical of takeoff and approach)
$V_{FE_100\%}$	Maximum Flap Extended Speed (100%) is the highest speed permissible with wing flaps extended to the 100% position (typical of landing).
V_{NO}	Maximum Structural Cruising Speed is the speed that should not be exceeded except in smooth air, and then only with caution.
V_{NE}	Never Exceed Speed is the speed that may not be exceeded at any time.
V_{PD}	Maximum Demonstrated Parachute Deployment Speed is the maximum speed at which parachute deployment has been demonstrated.

General Airspeed Terminology (Continued)	
Terminology	**Definition**
V_{REF}	Landing reference speed or threshold crossing speed.
V_S	Stalling Speed is the minimum steady flight speed at which the aircraft is controllable.
V_{S0}	Stalling Speed is the minimum steady flight speed at which the aircraft is controllable in the normal landing configuration (100% flaps) at the most unfavorable weight and balance.
V_X	Best Angle of Climb Speed is the speed at which the airplane will obtain the highest altitude in a given horizontal distance. The best angle-of-climb speed normally increases slightly with altitude.
V_Y	Best Rate of Climb Speed is the speed at which the airplane will obtain the maximum increase in altitude per unit of time. The best rate-of-climb speed decreases slightly with altitude.

Table 2: Meteorological Terminology

Meteorological Terminology	
Terminology	**Definition**
IMC	Instrument Meteorological Conditions are meteorological conditions expressed in terms of visibility, distance from cloud, and ceiling less than the minima for visual flight defined in 14 CFR 91.155.
ISA	International Standard Atmosphere (standard day) is an atmosphere where (1) the air is a dry perfect gas, (2) the temperature at sea level is 15 °C, and (3) the pressure at sea level is 29.92 in.Hg (1013.2 millibars).
MSL	Mean Sea Level is the average height of the surface of the sea for all stages of tide. In this AFM, altitude given as MSL is the altitude above the mean sea level. It is the altitude read from the altimeter when the altimeter's barometric adjustment has been set to the altimeter setting obtained from ground meteorological sources.

Meteorological Terminology (Continued)	
Terminology	**Definition**
OAT	Outside Air Temperature is the free air static temperature obtained from in-flight temperature indications or from ground meteorological sources. It is expressed in either °C or °F.
PA	Pressure Altitude is the altitude read from the altimeter when the altimeter's barometric adjustment has been set to 29.92 in.Hg (1013.21 mb) corrected for position and instrument error. In this AFM, altimeter instrument errors are assumed to be zero.
Standard Temperature	Standard Temperature is the temperature that would be found at a given pressure altitude in the standard atmosphere. It is 59 °F (15 °C) at sea level pressure altitude and decreases approximately 4 °F (2 °C) for each 1000 feet of altitude increase. See ISA definition.

Table 3: Engine Power Terminology

Engine Power Terminology	
Terminology	**Definition**
BHP	Brake Horsepower is the power developed by the engine.
MCP	Maximum Continuous Power is the maximum power that can be used continuously.
MAP	Manifold Pressure is the pressure measured in the engine's induction system expressed as in.Hg.
RPM	Revolutions Per Minute is engine rotational speed.
Static RPM	Static RPM is RPM attained during a full-throttle engine runup when the airplane is on the ground and stationary.
TIT	Turbine Inlet Temperature is the temperature measured at turbine inlet flange.

Table 4: Performance and Flight Planning Terminology

Performance and Flight Planning Terminology	
Terminology	**Definition**
g	One "g" is a quantity of acceleration equal to that of earth's gravity.
Demonstrated Crosswind Velocity	Demonstrated Crosswind Velocity is the velocity of the crosswind component for which adequate control of the airplane during taxi, takeoff, and landing was demonstrated during certification testing. Demonstrated crosswind is not considered to be limiting.
Service Ceiling	Service Ceiling is the maximum altitude at which the aircraft at maximum weight has the capability of climbing at a rate of 100 feet per minute.
GPH	Gallons Per Hour is the amount of fuel (in gallons) consumed by the aircraft per hour.
NMPG	Nautical Miles Per Gallon is the distance (in nautical miles) which can be expected per gallon of fuel consumed at a specific engine power setting and/or flight configuration.
Unusable Fuel	Unusable Fuel is the quantity of fuel that cannot be safely used in flight.
Usable Fuel	Usable Fuel is the fuel available for flight planning.

Table 5: Weight and Balance Terminology

Weight and Balance Terminology	
Terminology	**Definition**
Reference Datum	Reference Datum is an imaginary vertical plane from which all horizontal distances are measured for balance purposes.
Fuselage Station	Fuselage Station (FS) is a location along the airplane fuselage measured in inches from the reference datum and expressed as a number. For example: A point 123 inches aft of the reference datum is FS 123.
CG	Center of Gravity is the point at which an airplane would balance if suspended. Its distance from the reference datum is found by dividing the total moment by the total weight of the airplane.
Arm	Arm is the horizontal distance from the reference datum to the center of gravity (CG) of an item. The airplane's arm is obtained by adding the airplane's individual moments and dividing the sum by the total weight.
Moment	Moment is the product of the weight of an item multiplied by its arm.
Basic Empty Weight	Basic Empty Weight is the actual weight of the airplane including all operating equipment that has a fixed location in the airplane. The basic empty weight includes the weight of unusable fuel and full oil.
MAC	Mean Aerodynamic Chord is the chord drawn through the centroid of the wing plan area.
LEMAC	Leading Edge of Mean Aerodynamic Chord is the forward edge of MAC given in inches aft of the reference datum (fuselage station).
Maximum Gross Weight	Maximum Gross Weight is the maximum permissible weight of the airplane and its contents as listed in the aircraft specifications.
Maximum Takeoff Weight	Maximum Takeoff Weight is the maximum weight approved for the start of the takeoff run.

Weight and Balance Terminology (Continued)	
Terminology	**Definition**
Maximum Zero Fuel Weight	Maximum Zero Fuel Weight is the maximum permissible weight of the airplane and its contents minus the total weight of the fuel onboard.
Useful Load	Useful Load is the basic empty weight subtracted from the maximum takeoff weight. It is the maximum allowable combined weight of pilot, passengers, fuel, and baggage.

Section 2: Limitations

Table of Contents

Introduction 3
Certification Status 3
Taxiing, Takeoff, and Landing Limitations 4
Operational Limits 4
Airspeed Limitations 4
Operating Speeds 4
Flap Speeds 4
Airspeed Indicator Markings 5
Powerplant Limitations 6
Engine 6
Fuel 6
Oil 6
Engine Instrument Markings & Annunciations 8
Powerplant 8
Fuel 9
Electrical 9
Weight Limits 10
Center of Gravity Limits 10
Maneuver Limits 12
Flight Load Factor Limits 12
Minimum Crew Requirements 12
Kinds of Operation 12
Kinds of Operation Equipment List 12
Maximum Operating Altitude Limits 16
Outside Air Temperature Limit 16
Takeoff Temperature 16
Maximum Occupancy 17
Child Restraint System Limits 17
Systems and Equipment Limits 18
Flap Limitations 18
Icing Conditions 18
Kinds of Operation 18
Severe Icing 20
Operation 20
Ice Protection System (IPS) Fluid 21
Use of Autopilot in Icing Conditions 21

Probe Heat Switch (if installed) 21
Autopilot 22
Minimum Autopilot Speed 22
Maximum Autopilot Speed 22
Minimum-Use-Height 22
Engagement Limits 23
Safe Return Autoland System (if installed) 23
Navigation and Communication Equipment 24
Attitude and Heading Reference System (AHRS) 24
Cirrus Perspective Touch+ Integrated Avionics System 25
Traffic Advisory System (TAS) 27
Navigation Map and Weather Map 27
SafeTaxi, Runway Occupancy Awareness, Taxiway Routing and Chartview (if installed) 27
Terrain Proximity Map 27
Synthetic Vision System (SVS) 28
Terrain Awareness Warning System (Optional) 28
Max Viz Enhanced Vision System (Optional) 28
Stormscope Weather Information System (Optional) 28
Air Conditioning System 29
Inflatable Restraint System 29
Cirrus Airframe Parachute System (CAPS) 29
Other Limitations 29
Smoking 29
Crew Communication 29
Placards 30
Exterior Placards 30
Interior Placards 32

Introduction

The limitations included in this Section of the AFM are approved by the Federal Aviation Administration.

This section provides operating limitations, instrument markings, and basic placards required by regulation and necessary for the safe operation of the aircraft and its standard systems and equipment.

• Note •

Compliance with the operating limitations in this section and in Section 9 is required by the Code of Federal Regulations.

For installed equipment described in an FAA Approved AFM Supplement, refer to Section 9: Log of Supplements of this AFM for amended operating limits.

Certification Status

The aircraft is certificated under the requirements of 14 CFR, Part 23 Airworthiness Standards: Normal Category, Part 36, Noise Standards, and Special Conditions prescribed by the Administrator.

Taxiing, Takeoff, and Landing Limitations

Operational Limits

This airplane may be operated on any smooth runway surface.

Maximum Tailwind for Takeoff and Landing..... 10 knots

Airspeed Limitations

Operating Speeds

Operating Maneuvering Speed (V_O) 3600lbs ..... 140 KIAS

Never Exceed Speed (V_{NE}) up to 17,500 feet MSL..... 205 KIAS

Never Exceed Speed (V_{NE}) at FL250..... 175 KIAS

Max. Structural Cruising Speed (V_{NO}) up to 17,500 feet MSL ..... 176 KIAS

Max. Structural Cruising Speed (V_{NO}) at FL250 ..... 150 KIAS

• **NOTE** •

V_{NE} and V_{NO} are reduced linearly from 17,500 feet to FL250.

Flap Speeds

Maximum flap extended speed, 50% ($V_{FE_50\%}$)..... 150 KIAS

Maximum flap extended speed, 100% ($V_{FE_100\%}$)..... 110 KIAS

Airspeed Indicator Markings

The airspeed indicator markings are based on Section 5, Airspeed Calibration - Normal Static Source Table. When using the alternate static source, allow for the airspeed calibration variations between the normal and alternate static sources.

Marking	Value (KIAS)	Remarks
White Arc	64 to 110	Full Flap Operating Range. Lower limit is the most adverse stall speed in the landing configuration. Upper limit is the maximum speed permissible with flaps extended. Do not use flaps above 17,500 feet MSL.
Green Arc up to 17,500 feet MSL at FL250	 74 to 176 74 to 150	Normal Operating Range. Lower limit is the maximum weight stall at most forward C.G. with flaps retracted. Upper limit is the maximum structural cruising speed (V_{NO}). V_{NO} and upper limit of green arc is reduced linearly from 17,500 feet to FL250.
Yellow Arc up to 17,500 feet MSL at FL250	 176 to 205 150 to 175	Caution Range. Operations must be conducted with caution and only in smooth air. Upper and lower limits of yellow arc are reduced linearly from 17,500 feet to FL250.
Red Arc up to 17,500 feet MSL at FL250	 205 175	Never Exceed Speed (V_{NE}). Maximum speed for all operations. V_{NE} and red line is reduced linearly from 17,500 feet to FL250.

Powerplant Limitations

Engine

Continental Aerospace Technologies TSIO-550-K

Power Rating ..... 315 bhp @ 2500 RPM

Maximum RPM .....2500 RPM

Operating Limits ..... Do not reduce manifold pressure below 15 inches when above FL180.

Fuel

Approved Fuel ..... Aviation Grade 100 LL (Blue) or 100 (Green)

Total Fuel Capacity ..... 94.5 U.S. gallons (358.0 L)

Total Fuel Each Tank ..... 47.25 U.S. gallons (179.0 L)

Total Usable Fuel (all flight conditions) ..... 92.0 U.S. gallons (348.0 L)

Maximum Allowable Fuel Imbalance ..... 10.0 U.S. gallons (37.9 L)

The fuel pump must be set to BOOST for takeoff, climb, and landing.

Oil

Maximum Oil Temperature ..... 240 °F (116 °C)

Minimum Oil Temperature for Takeoff ..... 100 °F (37.8 °C)

Minimum Oil Pressure .....10 psi

Maximum Oil Pressure .....100 psi

Approved Oils:

Engine Break-In: For first 25 hours of operation or until oil consumption stabilizes, use straight mineral oil conforming to MIL-C-6529. If engine oil must be added to the factory installed oil, add only MIL-C-6529 straight mineral oil.

• **NOTE** •

Mineral oil conforming to MIL-C-6529 Type II contains a corrosion preventive additive and must not be used for more than 25 hours or six months, whichever occurs first. If oil consumption has not stabilized in this time, drain the mineral oil, replace the oil filter and replace the discarded mineral oil with SAE J1966 aviation oil.

After Engine Break-In: Use only oils conforming to SAE J 1899 (Ashless Dispersant Lubrication Oil).

Recommended Oil Grades[a]		
Ambient Air Temperature (SL)	**Single Viscosity**	**Multi-Viscosity**
All Temperatures	-	15W-50 20W-50 20W-60
Above 40 °F (4 °C)	SAE 50	20W-50 20W-60
Below 40 °F (4 °C)	SAE 30	10W-30 15W-50 20W-50

a. For additional qualified oil grades and viscosities, refer to the Continental Motors M-0 Maintenance Manual.

• **NOTE** •

The correct grade of oil to be used is based on environmental conditions. If the aircraft is going to be flown into an area that is much warmer or colder than the aircraft is usually operated in, use a different viscosity of oil.

During operation, if the oil inlet temperatures are near the maximum permitted temperatures, then a higher viscosity oil can help to decrease the temperatures.

Engine Instrument Markings & Annunciations

The following describes the engine instrument markings. Associated Warning and Caution Annunciations are shown in capitalized text.

Powerplant

Instrument (Range & Units)	Red Arc/Bar	Yellow Arc/Bar	Green Arc/Bar	Yellow Arc/Bar	Red Arc/Bar
	Lower Warning Range	Min. Caution Range	Normal Range	Max. Caution Range	Upper Warning Range
Cylinder Head Temperature (100 °F to 500 °F)	––	––	240 to 420	420 to 460 CHT	> 460 CHT
Engine Speed (0 to 3000 RPM)	––	––	500 to 2550	––	> 2550 RPM
Exhaust Gas Temperature (1000 °F to 1800 °F)	––	––	1000 to 1800	––	––
Manifold Pressure (10 to 40 Inch Hg)	––	––	15.0 to 36.5	36.5 to 37.5	37.5 to 40.0
Oil Pressure (0 to 100 PSI)	0 to 10 OIL PRESS	10 to 30 OIL PRESS	30 to 60	60 to 100	> 100 OIL PRESS
Oil Temperature (75 °F to 250 °F)	––	––	100 to 240	––	> 240 OIL TEMP
Percent Power (0 to 100%)	––	––	0 to 100	––	––
Turbocharger Inlet Temperature (1000 °F to 1800 °F)	––	––	1000 to 1750	––	1750 to 1800 TIT

Fuel

Instrument (Range & Units)	Red Arc/Bar	Yellow Arc/Bar	Green Arc/Bar	Yellow Arc/Bar	Red Arc/Bar
	Minimum	Minimum Caution Range	Normal Range	Maximum Caution Range	Maximum
Fuel Flow (0 to 45 U.S. Gal/Hr)	--	--	See Note[a]	See Note[a]	See Note[a]
Fuel Quantity (0 to 46 U.S. Gallon)	0	0 to 14	14 to 46	--	--

a. Dynamically changes based on engine parameters.

Electrical

Instrument (Range & Units)	Red Arc/Bar	Yellow Arc/Bar	Green Arc/Bar	Yellow Arc/Bar	Red Arc/Bar
	Minimum	Minimum Caution Range	Normal Range	Maximum Caution Range	Maximum
Essential Bus Volts (0 to 36 Volts)	0 to 24.4	--	24.5 to 32	--	> 32
Main Bus 1 Voltage (0 to 36 Volts)	--	0 to 24.4	24.5 to 32	--	> 32
Main Bus 2 Voltage (0 to 36 Volts)	--	0 to 24.4	24.5 to 32	--	> 32
Alternator 1 Current (0 to 100 Amps)	--	0 to <2[a]	2 to 100	--	--
Alternator 2 Current (0 to 100 Amps)	--	0 to <2[a]	2 to 100	--	--
Battery 1 Current (-80 to 80 Amps)	--	-80 to <-4[b]	-4 to 80	--	--

a. 20 second delay of Caution CAS message.
b. 30 second delay of Caution CAS message.

Weight Limits

Maximum Takeoff Weight .....3600 lb (1633 kg)
Maximum Zero Fuel Weight.....3400 lb (1542 kg)
Maximum Weight in Baggage Compartment ..... 130 lb (59 kg)

Center of Gravity Limits

CG Envelope	Weight (lb)	FS (inches)
Forward Light	2100	137.8
Forward Intermediate	2700	139.1
Forward Gross	3600	143.2
Aft Gross	3600	148.1
Aft Light	2100	148.1

Figure 2-1: Center of Gravity Envelope

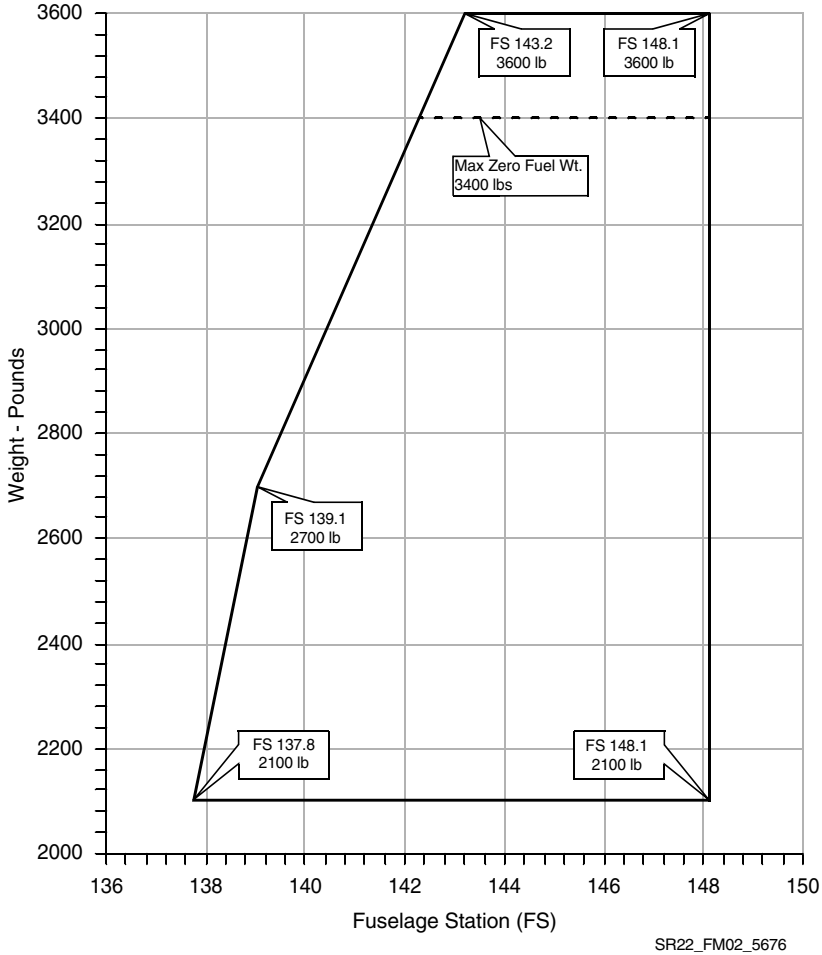

Maneuver Limits

Acrobatic maneuvers are prohibited.

Spins are prohibited.

This airplane is certified in the Normal category.

• NOTE •

Because the aircraft has not been certified for spin recovery, the Cirrus Airframe Parachute System (CAPS) must be deployed if the airplane departs controlled flight. Refer to Section 3, Inadvertent Spin Entry.

Flight Load Factor Limits

Flaps UP (0%), any weight.....+3.8g, -1.9g

Flaps 50%, any weight ..... +1.9g, 0g

Flaps 100% (Down), any weight ..... +1.9g, 0g

Minimum Crew Requirements

The minimum flight crew is one pilot.

Kinds of Operation

The aircraft is equipped and approved for the following type operations:

- VFR day and night.
- IFR day and night.
- Serials w/ IPS: Flight into known icing. See Icing Conditions in this section for more information.

Kinds of Operation Equipment List

The following listing summarizes the equipment required under 14 Code of Federal Regulations (CFR) Part 23 for airworthiness under the "listed kind of operation". Those minimum items of equipment necessary under the operating rules are defined in 14 CFR Part 91.

• NOTE •

All references to types of flight operations on the operating limitations placards are based upon equipment installed at the time of Airworthiness Certificate issuance.

System, Instrument and/or Equipment	Kinds of Operation				Remarks, Notes, and/or Exceptions
	VFR Day	VFR Night	IFR Day	IFR Night	
PLACARDS AND MARKINGS					
Airplane Flight Manual	1	1	1	1	
Garmin Cockpit Reference Guide	1	1	1	1	
COMMUNICATIONS					
VHF COM	A/R	A/R	1	1	
ELECTRICAL POWER					
Battery 1	1	1	1	1	
Battery 2	-	-	1	1	
Alternator 1	1	1	1	1	
Alternator 2	-	-	1	1	
Electrical Indications	1	1	1	1	
Circuit Breakers	A/R	A/R	A/R	A/R	As required.
EQUIPMENT & FURNISHINGS					
Emergency Locater Transmitter	1	1	1	1	
Egress Hammer	1	1	1	1	
Restraint System	A/R	A/R	A/R	A/R	One seat belt for each occupant.
Inflatable Restraints	-	-	-	-	
FIRE PROTECTION					
Fire Extinguisher	1	1	1	1	
FLIGHT CONTROLS					
Flap Position Indicator	1	1	1	1	
Flap System	1	1	1	1	
Pitch Trim Indicator	1	1	1	1	

System, Instrument and/or Equipment	Kinds of Operation				Remarks, Notes, and/or Exceptions
	VFR Day	VFR Night	IFR Day	IFR Night	
Pitch Trim System	1	1	1	1	
Roll Trim Indicator	1	1	1	1	
Roll Trim System	1	1	1	1	
Stall Warning System	1	1	1	1	
Stick Shaker	-	-	-	-	
FUEL					
Auxiliary Fuel Pump	1	1	1	1	
Fuel Quantity Indicators	2	2	2	2	
Fuel Selector Valve	1	1	1	1	
Automatic Fuel Selection	-	-	-	-	
ICE PROTECTION					
Alternate Engine Air Induction System	1	1	1	1	
Alternate Static Air Source	1	1	1	1	
Pitot Heat	-	-	1	1	
LANDING GEAR					
Wheel Pants	-	-	-	-	May be removed.
LIGHTS					
Anticollision Lights	2	2	2	2	
Instrument Lights	-	1	-	1	
Navigation Lights	-	2	-	2	
Landing Light	-	1	-	1	For hire operations.
Flash Light	-	1	-	1	
Ice Inspection Light	-	-	-	1	

System, Instrument and/or Equipment	Kinds of Operation				Remarks, Notes, and/or Exceptions
	VFR Day	VFR Night	IFR Day	IFR Night	
NAVIGATION & PITOT STATIC					
Primary ADAHRS	1	1	2	2	
Standby ADAHRS	-	-	1	1	If installed.
Magnetic Compass	A/R	A/R	A/R	A/R	
Pitot System	1	1	1	1	
Static System, Normal	1	1	1	1	
VHF NAV	-	-	A/R	A/R	
GPS	-	-	A/R	A/R	
PFD/MFD	1	1	2	2	
Touchscreen Controller	1	1	2	2	
Marker Beacon Receiver	-	-	A/R	A/R	
Remote Audio Panel	A/R	A/R	1	1	
Transponder	1	1	1	1	
Radar Altimeter	-	-	-	-	If installed.
ENGINE INDICATING					
Cylinder Head Temperature	-	-	-	-	
Exhaust Gas Temperature	-	-	-	-	
Fuel Flow	1	1	1	1	
Manifold Pressure	1	1	1	1	
Oil Pressure	1	1	1	1	
Oil Quantity (Dipstick)	1	1	1	1	
Oil Temperature	1	1	1	1	
Turbine Inlet Temperature	1	1	1	1	
Engine Speed	1	1	1	1	

System, Instrument and/or Equipment	Kinds of Operation				Remarks, Notes, and/or Exceptions
	VFR Day	VFR Night	IFR Day	IFR Night	
SPECIAL EQUIPMENT					
Cirrus Airframe Parachute (CAPS)	1	1	1	1	
Safe Return Autoland System	-	-	-	-	

Maximum Operating Altitude Limits

Maximum Airport Elevation.....10,000 ft MSL

Maximum Operating Altitude FL250

Outside Air Temperature Limit

Takeoff Temperature

Minimum Takeoff Temperature ..... -40 °F (-40 °C)

Maximum Occupancy

Occupancy of this airplane is limited to “4+1” persons, the pilot and four passengers. If carrying three rear seat passengers, occupants must be wearing a seat belt and shoulder harness with their hips and back firmly against the seat back as shown in the following illustration. If three rear seat passengers cannot meet these requirements, occupancy is limited to four persons.

Child Restraint System Limits

1. Rear seat configuration for LATCH / ISOFIX compliant child seats is limited to two seats in the outboard positions.
2. A single non-LATCH / ISOFIX compliant seat may be installed in the center seat position.
3. Installation of three child seats in the rear seat is prohibited.

Figure 2-2: Rear Passenger Seat Arrangement

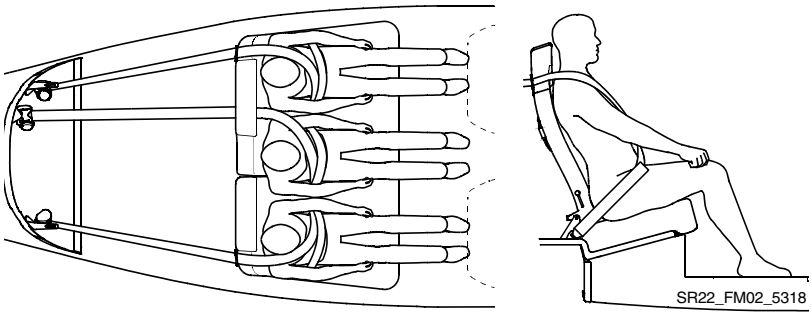

Systems and Equipment Limits

The appropriate revision of the Cirrus Perspective Touch+ Cockpit Reference Guide (P/N 190-02954-XX, where X can be any digit from 0 to 9) must be immediately available to the pilot during flight. The system software version stated in the reference guide must be appropriate for the system software version displayed on the equipment.

Flap Limitations

Approved Takeoff Settings 50%

Approved Landing Settings ..... UP, 50%, or 100%

Use of flaps above 17,500 feet MSL is prohibited.

Icing Conditions

Serials w/o IPS: Flight into known icing conditions is prohibited.

Serials w/ IPS:

In icing conditions the airplane must be operated as described in the operating procedures section of this manual. Where specific operational speeds and performance information have been established for such conditions, this information must be used.

• WARNING •

At the first sign of IPS malfunction, the aircraft must immediately exit icing conditions.

Kinds of Operation

The IPS allows flight into known icing as defined by Title 14 of the Code of Federal Regulations (CFR) Part 25, Appendix C - Envelopes for Continuous Maximum and Intermittent Maximum Icing.

This airplane is approved for flight into known icing conditions only if all the following conditions are met.

- The airplane is equipped with all of the IFR Day/Night equipment in the previous Kinds of Operation Equipment List in this section
- The airplane is equipped with all of the additional Cirrus and FAA approved equipment in the Kinds of Operation Equipment List within Icing Conditions

System, Instrument and/or Equipment	Kinds of Operation		Remarks, Notes, and/or Exceptions
	FIKI IFR Day	FIKI IFR Night	
FLIGHT CONTROLS			
AOA Vane Heat	1	1	
ICE & RAIN PROTECTION			
Windshield Spray Nozzles	1	1	
Wing LH and RH Inboard Panel	1	1	
Wing LH and RH Outboard Panel	1	1	
Horizontal Stabilizer LH and RH Panel	1	1	
Elevator Tip LH and RH Panel	1	1	
Vertical Stabilizer Panel	1	1	
Propeller Slinger Ring	1	1	
IPS Controller and Annunciation	1	1	
LANDING GEAR			
Wheel Pants	1	1	

Severe Icing

The airplane is prohibited from operating in severe icing conditions. Severe icing conditions are defined as any freezing drizzle, any freezing rain, Supercooled Large Droplets (SLD), or any icing conditions that overwhelm the ice protection systems. If the airplane encounters such conditions, the pilot must (i) immediately exit icing conditions by changing altitude or course, and (ii) remain clear of icing conditions for the remainder of the flight.

Severe icing conditions may be identified by the following:

- Unusually extensive ice accumulation on the airframe or windshield in areas not normally observed to collect ice
- Ice on or behind the wing or horizontal tail panels that cannot be removed with IPS HIGH flow
- Unusually extensive ice accreted on the airframe in areas not normally observed to collect ice
- Accumulation of ice on the upper or lower surface of the wing aft of the protected area
- Accumulation of ice on the propeller farther back than normally observed
- Inability of the airplane to maintain the published ice-contaminated performance specifications listed in Section 5: Performance Data

The following weather conditions may be conducive to severe icing:

- Visible rain at temperatures colder than 32 °F (0 °C) static air temperature.
- Droplets that splash or splatter at temperatures colder than 32 °F (0 °C) static air temperature.

Operation

Takeoff is prohibited with any frost (polished or not), ice, snow, or slush adhering to the wings, stabilizers, control surfaces, or engine inlet.

Minimum Airspeed for Flight into Known Icing Conditions.....95 KIAS*

*Includes all phases of flight, including approach, except as required for takeoff and landing.

Maximum Airspeed IPS operation.....177 KIAS AND 204 KTAS

Minimum Operating Temperature for IPS..... -30 °F (-34 °C)

Maximum Flap Deflection with Ice Accretions 50%

When holding in icing conditions the flaps must be UP (0%).

Limit ground operations of Lift Transducer Heat (PROBE HEAT) to 45 seconds.

Ice Protection System (IPS) Fluid

Minimum Dispatch Fluid Quantity

IPS Fluid Minimum Dispatch Quantity..... 5.0 U.S. gal (19 L)

Deicing Fluid Limits

Usable Tank Capacity ..... 8 Gallons (30 L)

Tank Capacity ..... 8.5 gallons (32 L)

Use of Autopilot in Icing Conditions

In light-to-moderate icing conditions, autopilot use with periodic checks (disconnect and hand fly) is permitted. However, autopilot use is prohibited in the following conditions:

- Severe Icing
- Any unusually small or large control forces, or control deflections, to move flight controls when the autopilot is disconnected periodically for checking purposes

Flap Setting in Flight into Known Icing	Minimum Autopilot Speed
100%	Prohibited
50%	85 KIAS
UP	90 KIAS

Probe Heat Switch (if installed)

Limit probe heat operation on ground to five minutes or less when OAT is above 41 °F (5 °C). Extended use in warmer temperatures may damage the composite structure adjacent to probe(s).

Autopilot

The Garmin GFC 700 Automatic Flight Control System (AFCS) has the following limitations:

Minimum Autopilot Speed

Flap Configuration	Minimum Autopilot Speed
100%	75 KIAS
50%	80 KIAS
UP	85 KIAS

Serials w/ IPS during flight into known icing conditions see the preceding Icing Conditions section for minimum autopilot speeds w/ IPS.

Maximum Autopilot Speed

Flap Configuration	Maximum Autopilot Speed
100%	110 KIAS
50%	150 KIAS
UP (up to 17,500 ft MSL)	185 KIAS
UP (at FL250)	160 KIAS

• NOTE •

Maximum Autopilot Speeds are decreased linearly from 17,500 ft MSL up to FL250

Minimum-Use-Height

Takeoff and Climb ..... 400 feet AGL

Enroute and Descent ..... 1,000 feet AGL

Approach (GP or GS Mode)... Higher of 200 feet AGL or Approach MDA, DA, DH

Approach (FLC, VS, PIT or ALT Mode ..... Higher of 400 feet AGL or Approach MDA)

Engagement Limits

The Autopilot may not be engaged beyond the Engagement Limits. If the Autopilot is engaged beyond the command limits (up to engagement limits), it will be rolled or pitched to within the command limits and an altitude loss of 1000 feet or more can be expected while attitude is established in the selected mode.

Axis	Autopilot Engagement Limit
Pitch	±50°
Roll	±75°

The Autopilot and Flight Director will not command pitch or roll beyond the Command Limits.

Axis	Autopilot Command Limit
FD Pitch Command Limits	+20°, -15°
FD Roll Command Limits (17,750 ft MSL and below)	30°
FD Roll Command Limits (above 17,750 ft MSL)	15°

Use of VNAV is not supported during an approach with a teardrop course reversal. VNAV will be disabled at the beginning of the teardrop.

Safe Return Autoland System (if installed)

The Safe Return Autoland system is for emergency situations only and must not be used when the pilot is able to land the aircraft.

Navigation and Communication Equipment

Attitude and Heading Reference System (AHRS)

Navigation using the Cirrus Perspective Touch+ Integrated Avionics System is prohibited in the following geographic areas.

Magnetic Cut-out Regions	Latitude	Longitude
North	North of 72° N	All longitudes
	North of 65° N	Between 75° W and 120° W. (Northern Canada)
	North of 70° N	Between 70° W and 128° W. (Northern Canada)
	North of 70° N	Between 85° E and 114° E. (Northern Russia)
South	South of 70° S	All longitudes
	South of 55° S	Between 120° E and 165° E. (Region south of Australia and New Zealand)

Cirrus Perspective Touch+ Integrated Avionics System

1. IFR enroute and terminal navigation is prohibited unless the pilot verifies the currency of the database or verifies each selected waypoint for accuracy by reference to current approved data.
2. Instrument approach navigation predicated upon the GPS Receiver must be accomplished in accordance with approved instrument approach procedures that are retrieved from the GPS equipment database. The GPS equipment database must incorporate the current update cycle.

   a) Receiver Autonomous Integrity Monitoring (RAIM) must be available at the Final Approach Fix for instrument approach procedures that do not use the integrity information from Satellite Based Augmentation Systems (SBAS). For flight planning purposes, in areas where SBAS coverage is not available, the pilot must check RAIM availability.

   b) Accomplishment of ILS, LOC, LOC-BC, LDA, SDF, MLS or any other type of approach not approved for GPS overlay with the GPS receiver is not authorized.

   c) Use of the VOR/ILS receiver to fly approaches not approved for GPS requires VOR/ILS navigation data to be present on the display.

   d) Vertical Navigation information for approach procedures that do not meet the ICAO Annex 10 requirements for precision approaches may be utilized for advisory information only. Use of Vertical Navigation information for Instrument Approach Procedures does not guarantee step-down fix altitude protection, or arrival at approach minimums in normal position to land.

   e) IFR non-precision approach approval is limited to published approaches within the U.S. National Airspace System. Approaches to airports in other airspace are not approved unless authorized by the appropriate governing authority.

   f) RNAV approaches must be conducted utilizing the GPS sensor.

   g) The Cirrus Perspective Touch+ Integrated Avionics System is compliant with AC 90-100A. As such, the Cirrus Perspective Touch+ system is eligible to fly RNAV 'Q' or 'T' routes, RNAV SID/STAR/ODPs and eligible to use RNAV substitution or RNAV alternate means of navigation (US Only). Refer to AC 90-100A for additional operator requirements and limitations.

h) The Cirrus Perspective Touch+ Integrated Avionics System includes navigation sensors that meet the standards set forth in TSOC145a/ETSO-C145 (Sensors) for Class 3 systems.

i) The Cirrus Perspective Touch+ Integrated Avionics System has been installed in accordance with AC 20-138A and is approved for navigation using GPS and SBAS (within the coverage of a Satellite Based Augmentation System complying with ICAO annex 10) for IFR enroute, terminal and approach operations.

j) The Cirrus Perspective Touch+ Integrated Avionics System complies with the standards set forth in AC 90-96A and JAA TGL-10 (rev 1) for BRNAV and PRNAV operations.

k) The navigation databases employed by the Cirrus Perspective Touch+ Integrated Avionics System meet the requirements set forth in AC 20-153 for database integrity, quality and database management practices. The data in the navigation databases are referenced to the WGS-84 reference system.

l) The Cirrus Perspective Touch+ Integrated Avionics System complies with the standards set forth in AMC 20-27 and NPA 2009-04 (AMC 20-28) for RNAV operations including LNAV/VNAV and LPV approach operations.

m) Barometric vertical navigation (Baro-VNAV) operations may be conducted if SBAS is unavailable or disabled. the Cirrus Perspective Touch+ Integrated Avionics System will provide automatic, temperature-compensated glidepath vertical guidance and has been shown to meet the accuracy requirements of VFR/IFR enroute, terminal, and approach Baro-VNAV operations within the conterminous US and Alaska in accordance with the criteria in AC 20-138D.

3. The installed ADS-B OUT system, including GTX 335 Mode S Transponder and GTX 345 Mode S UAT in Transponder (optional), has been shown to meet the equipment requirements of 14 CFR 91.227.

4. FIS-B Receiver Equipment, including GTX 345 Mode S UAT in Transponder (optional):

   a) Flight Information Services - Broadcast (FIS-B) information is intended to enhance pilot awareness of weather and airspace conditions. It does not replace positive two way communication when making safety critical weather or routing decisions. Use FIS-B weather and National Airspace System (NAS) status information as follows:

      (1) To aid pilot awareness of hazardous meteorological conditions and awareness of the regulatory status of the airspace.
      (2) FIS-B information is meant to enhance flight planning only. It lacks sufficient resolution and updating necessary for tactical maneuvering.

Traffic Advisory System (TAS)

Use of the Traffic Advisory System (TAS) to maneuver the airplane to avoid traffic is prohibited. The TAS is intended for advisory use only. TAS is intended only to help the pilot to visually locate traffic. It is the responsibility of the pilot to see and maneuver to avoid traffic.

Navigation Map and Weather Map

The Navigation Map is intended only to enhance situational awareness. Use of the Navigation Map page for pilotage navigation is prohibited.

LTNG information on the Navigation Map or Weather Map is approved only as an aid to hazardous weather avoidance. Use of the Weather Map for hazardous weather penetration is prohibited.

SafeTaxi, Runway Occupancy Awareness, Taxiway Routing and Chartview (if installed)

Do not use SafeTaxi, Runway Occupancy Awareness, Taxiway Routing, or Chartview functions as the basis for ground maneuvering. SafeTaxi, Taxiway Routing, and Chartview functions have not been qualified to be used as an Airport Moving Map Display. SafeTaxi, Taxiway Routing, and Chartview are to only be used by the flight crew to orient themselves on the airport surface to improve pilot situational awareness during ground operations.

Terrain Proximity Map

The Terrain Proximity Map is intended only to enhance situational awareness. Use of the Terrain Proximity information for primary terrain avoidance is prohibited.

Synthetic Vision System (SVS)

Use of the Synthetic Vision System (SVS) for flight guidance, navigation, traffic avoidance, or terrain avoidance is prohibited. Maneuvering the airplane in any phase of flight such as taxi, takeoff, approach, landing, or roll out should not be predicated on SVS imagery. The synthetic vision system is not intended to be used independently of traditional attitude instrumentation. Consequently, SVS is disabled when traditional attitude instrumentation is not available. Otherwise, the traditional attitude instrumentation will always be visible in the foreground with SVS features in the background.

Terrain Awareness Warning System (Optional)

Use of the Terrain Awareness and Warning System for navigation and terrain avoidance is prohibited. The TAWS is intended to serve as a situational awareness tool only and may not provide the accuracy fidelity on which to solely base terrain or obstacle avoidance maneuvering decisions.

To avoid getting unwanted alerts, TAWS must be inhibited when landing at an airport that is not included in the airport database.

• NOTE •

Only vertical maneuvers are recommended responses to warnings and cautions unless operating in VMC or the pilot determines, using all available information and instruments, that a turn, in addition to the vertical escape maneuver, is the safest course of action. During certain operations, warning thresholds may be exceeded due to specific terrain or operating procedures. During day VFR flight, these warnings may be considered as cautionary.

Max Viz Enhanced Vision System (Optional)

1. Use of the Enhanced Vision System (EVS) for flight guidance, navigation, traffic avoidance, or terrain avoidance is prohibited. Maneuvering the airplane in any phase of flight such as taxi, takeoff, approach, landing, or roll out must not be predicated on EVS imagery.
2. The appropriate revision of the Max Viz Enhanced Vision System Information Manual, (p/n 309100024) must be available to the pilot during flight.

Stormscope Weather Information System (Optional)

1. Use of the Weather Information System for hazardous weather penetration is prohibited.
2. The appropriate revision of the L-3 Avionics Systems WX500 Stormscope Series II Weather Mapping Sensor User's Guide, (p/n 009-11501-001) must be available to the pilot during flight.

Air Conditioning System

The use of Recirculation Mode during flight is prohibited.

Inflatable Restraint System

Use of a child safety seat with inflatable restraint system is prohibited.

Cirrus Airframe Parachute System (CAPS)

V_{PD} Maximum Demonstrated Deployment Speed.....140 KIAS

• NOTE •

Refer to Section 10, Cirrus Airframe Parachute System (CAPS) for additional CAPS guidance.

Other Limitations

Smoking

Smoking is prohibited in this airplane.

Crew Communication

One headset which satisfies the requirements of TSO C139() or a microphone which satisfies the requirements of TSO C58 must be available for pilot use when operations require two-way communications.

Placards

Exterior Placards

Figure 2-3: Placards (1 of 4)

Engine compartment, inside oil filler access:

ENGINE OIL GRADE

ABOVE 40°F (4°C) SAE 50, 20W50, OR 20W60

BELOW 40°F (4°C) SAE 30 OR 10W30, 15W50, OR 20W50

REFER TO AFM FOR APPROVED OILS

Wing, adjacent to fuel filler caps:

Upper fuselage, either side of CAPS rocket cover:

WARNING!

ROCKET FOR PARACHUTE DEPLOYMENT INSIDE

STAY CLEAR WHEN AIRPLANE IS OCCUPIED

SR22_FM02_5321A

Figure 2-3: Placards (2 of 4)

Left fuselage, on external power supply door:

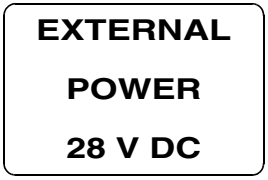

Doors, adjacent to latch:

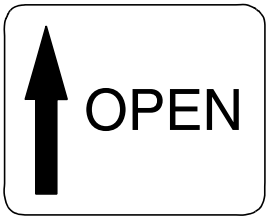

Wing, adjacent to fluid filler cap:

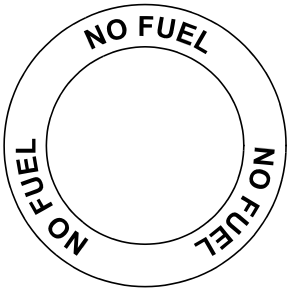

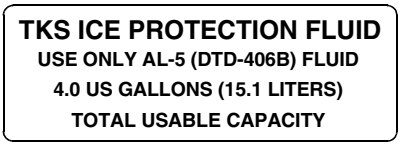

Serials w/ Ice Protection.

SR22_FM02_5322A

Interior Placards

Figure 2-3: Placards (3 of 4)

CAPS Overhead Placard :

SR22_FM02_5703A

Serials w/ Safe Return Autoland: A placard stating “EMERGENCY USE ONLY” must appear adjacent to activation button.

Figure 2-3: Placards (4 of 4)

Baggage Compartment, aft edge:

ELT LOCATED BEHIND BULKHEAD
REMOVE CARPET AND ACCESS PANEL

Cabin Door Window, lower edge, centered, applied upside down:

RESCUE: FRACTURE AND REMOVE WINDOW

Cabin Window, above door latch:

EMERGENCY EXIT
REMOVE EGRESS HAMMER FROM WITHIN CENTER ARMREST LID. STRIKE CORNER OF WINDOW. KICK OR PUSH OUT AFTER FRACTURING

Baggage Compartment Door, inside:

DISTRIBUTED FLOOR LIMIT 130 LBS

BAGGAGE STRAP CAPACITY IS 35 LBS EACH MAXIMUM

SEE AIRPLANE FLIGHT MANUAL FOR BAGGAGE TIE-DOWN AND WEIGHT AND BALANCE INFORMATION

SR22_FM02_5704

Intentionally Left Blank

Section 3: Emergency Procedures

Table of Contents

Introduction 5
Crew Alert System (CAS) Messaging 5
Warnings 5
CAPS Guidance 5
Preflight Planning 6
Preflight Inspections/Maintenance 6
Methodology 6
Maintain Aircraft Control 6
Analyze the Situation 6
Take Appropriate Action 6
Land as Soon as Conditions Permit 7
Circuit Breakers 7
Memory Items 8
Procedure Division Symbols 8
Landing Guidance 8
Land as Soon as Practicable 8
Land as Soon as Possible 8
Airspeeds for Emergency Operations 9
Maneuvering Speed 9
Best Glide (Flaps: UP) 9
Emergency Landing 9
Glide 10
Best Glide Speed 10
Emergency Procedures 11
Automatic Flight Control Malfunction (Autopilot, ESP, Flaps, Throttle, Mixture) 11
Cabin Fire In Flight 11
CAPS Deployment 13
Ditching 15
Emergency Descent 15
Emergency Engine Shutdown On Ground 16
Emergency Ground Egress 16
Emergency Landing w/o Power 17
Engine Failure in Flight 18
Engine Failure On Takeoff - Low Altitude 21
Engine Fire During Start 22

Engine Fire In Flight 22
Engine Partial Power Loss 23
Ice Protection System Failure/ Excessive Ice Accumulation 25
Inadvertent Spin Entry 26
Landing Without Elevator Control 27
Overboost / Pressure Relief Valve 27
Power Lever Linkage Failure 28
Propeller Governor Failure 29
Rejected Takeoff 29
Smoke and Fume Elimination 30
Unexpected Loss Of Manifold Pressure 31
Wing Fire In Flight 32
Emergency CAS Procedures 33
AOA OVERHEAT Warning 33
APPROACH SPEED Warning 33
AUTO DESCENT Warning 34
CHT Warning 36
CO LEVEL HIGH Warning 37
EMER AUTOLAND ACTIVATING Warning 38
ESSENTIAL BUS VOLTS Warning 39
FLAPS ICE Warning 40
FUEL FLOW Warning 41
FUEL IMBALANCE Warning 42
FUEL LOW LEFT Warning 42
FUEL LOW RIGHT Warning 43
FUEL LOW TOTAL Warning 43
IPS CONTROL FAIL Warning 43
IPS FLUID LOW Warning 44
IPS QUANTITY FAIL Warning 44
MAIN BUS 1 VOLTS Warning 44
MAIN BUS 2 VOLTS Warning 45
MANIFOLD PRESSURE Warning 46
OIL PRESSURE Warning 47
OIL TEMP Warning 47
OXYGEN FAULT Warning 48
OXYGEN QTY LOW Warning 49
OXYGEN REQUIRED Warning 49
RPM Warning 50
SPIN SPIN SPIN Warning 51
STALL Warning 52
STALL WARNING FAIL Warning 52

STARTER ENGAGED Warning 53
TIT Warning..... 54

Intentionally Left Blank

Emergency Procedures

Cabin Fire In Flight

Added warning following fire extinguisher activation step.

• WARNING •

Serials w/ Halotron fire extinguisher: **The fire extinguisher should only be used in one second blasts. If the fire is not extinguished following one second blasts, use as required to extinguish the fire. Inhalation of the complete discharge of the fire extinguisher may result in cardiotoxicity and/or anesthetic effects to the occupants.**

Intentionally Left Blank

Introduction

This section provides procedures for handling emergencies and critical flight situations that may occur while operating the aircraft. Although emergencies caused by airplane, systems, or engine malfunctions are rare, the guidelines described in this section should be considered and applied as necessary should an emergency arise.

Emergency procedures associated with optional equipment are not described in this section.

Although this section provides procedures for handling most emergencies and critical flight situations that could arise in the aircraft, it is not a substitute for proper flight training, thorough knowledge of the airplane, and recognized piloting techniques and standards. A thorough study of the information in this manual while on the ground will help you prepare for time-critical situations in the air.

• **NOTE** •

Refer to Section 9: Log of Supplements for optional equipment Emergency Procedures.

Crew Alert System (CAS) Messaging

Warnings

Displayed in red against a black background, Warning CAS messages arise during emergency situations that require immediate flight crew awareness and immediate flight crew response.

- A flashing Warning CAS message with an accompanying aural alert requires immediate action.
- A Warning CAS message with no accompanying aural alert requires attention, dependent on workload. It may also require performing maintenance or taking corrective action prior to next flight. Warnings with no aural alert typically occur while on ground.

CAPS Guidance

All Cirrus aircraft are equipped with a pilot or passenger activated ballistic airframe parachute system. The system is capable of lowering the aircraft and occupants safely to the ground for life threatening emergencies. CAPS provides pilots and passengers an alternative means of handling various life threatening emergency situations. In many cases CAPS may offer a safer option for occupants as compared to continued flight or traditional countermeasures. Pilots flying Cirrus aircraft must be properly trained and familiar with CAPS guidance, limitations, and operating procedures. Refer to Section 10, Cirrus Airframe Parachute System (CAPS), for CAPS deployment and guidance information.

Preflight Planning

Enroute emergencies caused by weather can be minimized or eliminated by careful flight planning and good judgment when unexpected weather is encountered.

Preflight Inspections/Maintenance

In-flight mechanical problems in the aircraft will be extremely rare if proper preflight inspections and maintenance are practiced. Always perform a thorough walk-around inspection before any flight to ensure that no damage occurred during the previous flight or while the airplane was on the ground. Pay special attention to any oil leaks or fuel stains that could indicate engine problems.

• NOTE •

Refer to Section 4: Normal Procedures, "Preflight Inspection" for more information.

Methodology

Aircraft emergencies are dynamic events. Because of this, it is impossible to enumerate every action a pilot should properly undertake in response to a particular situation. However, four basic actions can be applied to any emergency. They are:

Maintain Aircraft Control

Many minor aircraft emergencies turn into major ones when the pilot fails to maintain aircraft control. Do not panic and do not fixate on a particular problem. Over-attention to a warning light during an instrument approach can lead to a pilot-induced unusual attitude, and possibly worse. To avoid this, even in an emergency: always aviate, navigate, and communicate, in that order. Never let anything interfere with your control of the airplane. Never stop flying.

Analyze the Situation

Once you are able to maintain control of the aircraft, assess the situation. Read all warning and caution messages. Evaluate the engine parameters. Consider all aircraft operational information at your disposal.

Take Appropriate Action

In many situations, the procedures listed in this section will either correct or mitigate the aircraft problem or allow safe recovery of the aircraft. Follow them and use good pilot judgment.

The Cirrus Airframe Parachute System (CAPS) should be activated in the event of a life-threatening emergency where CAPS deployment is determined to be safer than continued flight and landing.

• NOTE •

Refer to Section 10, Cirrus Airframe Parachute System (CAPS) for CAPS deployment information and landing considerations.

Land as Soon as Conditions Permit

Once you have evaluated and responded to the emergency, assess your next move. Perform any non-critical "clean-up" items in the checklist and land as soon as practicable. Even if the airplane appears to be in sound condition, it may not be.

• NOTE •

Refer to Landing Guidance in this section for factors that determine landing criticality.

Circuit Breakers

Some procedures involve manipulating circuit breakers (CBs). The following criteria should be followed during "circuit breaker" steps:

- Intentional pulling of circuit breakers during flight, other than as required in specific procedures, may cause abnormal or unexpected system behavior and is not recommended.
- When instructed to "SET", the appropriate circuit breaker should be checked for normal condition. If the circuit breaker is not "SET", it may be reset only once. If the circuit breaker opens again, do not reset.
- When instructed to "PULL", the appropriate circuit breaker should only be pulled and not reset.
- When instructed to "CYCLE", the appropriate circuit breaker should be pulled, delayed for several seconds, and reset only once. Allow sufficient cooling time for circuit breakers that are reset through a "CYCLE" procedure.

Memory Items

Checklist steps emphasized by a rectangular enclosure, such as the example below, should be memorized for accomplishment without reference to the procedure, due to the nature of their urgency.

1. Mixture .....CUTOFF

Procedure Division Symbols

For procedures requiring pilot decision, conditional steps are indented with a symbol to designate sub-sections within the procedure. On condition, the pilot makes a decision to identify the applicable sub-section.

Following the initial decision, a further sub-division of the procedure may occur. In that event, one or more additional conditions guides the pilot through the remaining decisions. Once the applicable condition(s) are identified, the pilot follows the remaining steps until the indication "Procedure Complete" is reached.

The procedure symbol levels are:

◆ First Level
  ❍ Second Level
    ❑ Third Level

Landing Guidance

Land as Soon as Practicable

The pilot may consider the convenience of future maintenance when selecting an airport to land as soon as practicable. Pilots must not overfly a suitable and practicable airport for other ground conveniences.

Land as Soon as Possible

The pilot must identify and land at the first available airport that allows for a safe approach and landing considering the approach procedures available, ceilings, visibility, winds and runway lengths

Airspeeds for Emergency Operations

Maneuvering Speed

3600 lb (1633 kg) ..... 140 KIAS

Best Glide (Flaps: UP)

All Weights ..... 92 KIAS

Emergency Landing

Flaps UP ..... 90 KIAS
Flaps 50% ..... 85 KIAS
Flaps 100% ..... 80 KIAS

Glide

Conditions		Example	
Power	OFF	Altitude	10,000 ft. AGL
Propeller	Windmilling	Airspeed	Best Glide
Flaps	0% (UP)	Glide Distance Normal Conditions	14.2 NM
Wind	Zero	Glide Distance w/ Ice Accumulation	10.5 NM

Best Glide Speed

3600 lb (1633 kg)..... 92 KIAS

Figure 3-1: Maximum Glide Ratio
Normal Conditions ~ 8.6 : 1
w/ Ice Accumulation ~ 6.4 : 1

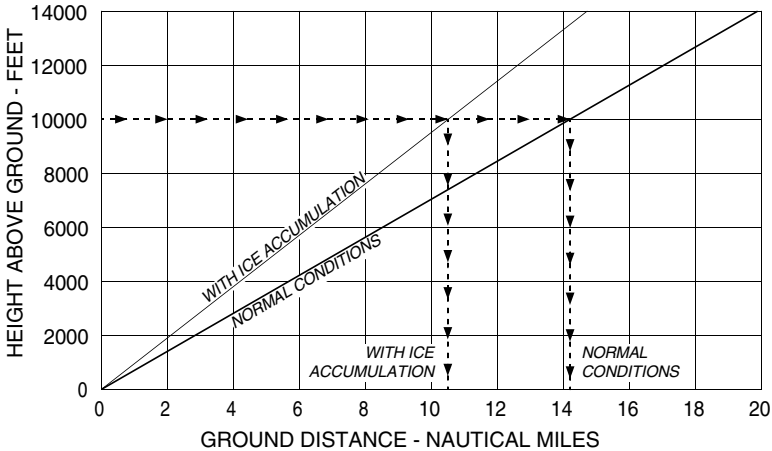

SR22_FM03_5705

Emergency Procedures

Automatic Flight Control Malfunction (Autopilot, ESP, Flaps, Throttle, Mixture)

1. AP DISC Button ..... PRESS AND HOLD
2. AP SERVOS (A1), ENGINE SERVOS (C2), FLAPS (D4) CB PULL A/R
3. AP DISC Button ..... RELEASE
4. Land as soon as practicable.

Procedure Complete

Cabin Fire In Flight

1. BAT 1, ALT 1, and ALT 2 Switches ..... OFF
2. Fire Extinguisher ..... ACTIVATE AS REQUIRED
3. All other switches ..... OFF
4. Land as soon as possible.

◆ If setting BAT/ALT switches off eliminated source of fire or fumes and airplane is in night or IFR conditions:

a. Airflow Selector ..... OFF
b. BAT 1, ALT 1, and ALT 2 Switches ..... ON
c. Required Systems ..... ACTIVATE ONE AT A TIME
d. Temperature Selector ..... COLD
e. Vent Selector ..... FEET/PANEL/DEFROST
f. Airflow Selector ..... SET AIRFLOW TO MAXIMUM
g. Panel Vents ..... OPEN
h. Land as soon as possible.

Procedure Complete

• **NOTE** •

With both BAT and both ALT switches OFF, engine will continue to run. However, no electrical power will be available.

(Continued on next page)

(Continued)

• **NOTE** •

If the airplane is in IMC conditions, turn ALT 1, ALT 2, and BAT 1 switches OFF. Power from battery 2 will keep the PFD and GTC's operational for approximately 30 minutes. If airplane is in day VFR conditions and turning off the BAT/ALT switches eliminated the fire situation, leave the BAT/ALT switches OFF. Do not attempt to isolate the source of the fire by checking each individual electrical component.

If the cause of the fire is readily apparent and accessible, use the fire extinguisher to extinguish flames and land as soon as possible. Opening the vents or doors may feed the fire, but to avoid incapacitating the crew from smoke inhalation, it may be necessary to rid cabin of smoke or fire extinguishant.

If required to re-activate systems, pause several seconds between activating each system to isolate malfunctioning system. Continue flight to earliest possible landing with malfunctioning system off. Activate only the minimum amount of equipment necessary to complete a safe landing.

CAPS Deployment

• WARNING •

The maximum demonstrated deployment speed is 140 KIAS. Jerking or rapidly pulling the activation handle will greatly increase the pull forces required to activate the rocket. Use a firm and steady pulling motion – a "chin-up" type pull ensures successful activation.

1. Activation Handle.... PULL DOWN STEADILY WITH BOTH HANDS

• NOTE •

Wait for aircraft to stabilize beneath canopy before proceeding.

2. Mixture ..... CUTOFF
3. Fuel Selector ..... OFF
4. Fuel Pump ..... OFF
5. BAT /ALT Switches ..... OFF

   Turn the BAT/ALT switches off after completing any necessary radio communications.

6. Engine Knob ..... OFF
7. ELT ..... VERIFY ON
8. Loose Items ..... SECURE
9. Seat Belts ..... TIGHTEN
10. Assume emergency landing body position.
11. After the aircraft comes to a complete stop, evacuate quickly and move upwind well clear of both aircraft and parachute.

Procedure Complete

• NOTE •

The Cirrus Airframe Parachute System (CAPS) should be activated immediately in the event of a spin. It should also be used in other life threatening emergencies where CAPS deployment is determined to be safer than continued flight and landing.

Expected impact in a fully stabilized deployment is equivalent to a drop from approximately 13 feet.

(Continued on next page)

(Continued)

• CAUTION •

CAPS deployment will likely result in damage or loss to the airframe.

• NOTE •

Several possible scenarios in which the activation of the CAPS would be appropriate are discussed in Section 10: Safety Information of this Manual. These include:

- Mid-air collision
- Structural failure
- Loss of control
- Landing in inhospitable terrain
- Pilot incapacitation

All pilots should carefully review the information on CAPS activation and deployment in Section 10 before operating the aircraft.

CAPS Deployment at High Altitudes

For any indicated airspeed, as altitudes increase the true airspeed of the deployment increases. Higher true airspeeds increase the parachute inflation loads. Therefore, it is important the operator takes all reasonable efforts to slow to the minimum possible airspeed prior to deploying the CAPS.

Ditching

1. Radio ..... TRANSMIT (ATC OR 121.5 MHz) MAYDAY WITH LOCATION AND INTENTIONS
2. Transponder ..... SQUAWK 7700
3. CAPS ..... ACTIVATE
4. Airplane ..... EVACUATE
5. Flotation Devices (if available) ..... INFLATE WHEN CLEAR OF AIRPLANE

Procedure Complete

• WARNING •

Consider unlatching a door prior to assuming the emergency landing body position in order to provide a ready escape path.
It may be necessary to allow some cabin flooding to equalize pressure on the doors. If the doors cannot be opened, break out the windows with the egress hammer and crawl through the opening.

• NOTE •

If available, life preservers should be donned and life raft should be prepared for immediate evacuation upon touchdown.

Emergency Descent

1. AP DISC Button ..... PRESS AND RELEASE
2. Power Lever ..... IDLE
3. Mixture ..... RICH (AS REQ'D)
4. Airspeed ..... INCREASE TO V_{NE}

Procedure Complete

• CAUTION •

If significant turbulence is expected, do not descend at indicated airspeeds greater than V_{NO}.

Emergency Engine Shutdown On Ground

1. Mixture ..... CUTOFF
2. Fuel Pump ..... OFF
3. Fuel Selector ..... OFF
4. Engine Knob ..... OFF
5. BAT/ALT Switches ..... OFF

Procedure Complete

Emergency Ground Egress

1. Mixture ..... CUTOFF
2. Fuel Pump ..... OFF
3. BAT /ALT Switches ..... OFF
4. Parking Brake ..... SET
5. Egress aircraft.

Procedure Complete

• WARNING •

While exiting the airplane, make sure evacuation path is clear of other aircraft, spinning propellers, and other hazards.

If the engine is left running, set the Parking Brake prior to evacuating the airplane.

If the doors cannot be opened, break out the windows with egress hammer, located in the console between the front seats, and crawl through the opening.

Emergency Landing w/o Power

1. Pitch for best glide.
2. Turn towards nearest practical landing site.
3. Radio..... TRANSMIT (ATC OR 121.5 MHz) MAYDAY WITH LOCATION AND INTENTIONS
4. Transponder .....SQUAWK 7700
5. Mixture..... CUTOFF
6. Fuel Pump ..... OFF
7. Fuel Selector..... OFF
8. Engine Knob ..... OFF

◆ If landing site is improved:

a. Flaps..... AS REQUIRED
b. Seat Belt(s) .....SECURED
c. Touchdown ..... NORMAL TECHNIQUE

• WARNING •

If a safe landing is not assured, consider CAPS Deployment. Refer to Section 10, Cirrus Airframe Parachute System (CAPS) **for CAPS deployment scenarios and landing considerations.**

After landing:

a. BAT 1 and BAT 2 Switches ..... OFF
b. Evacuate airplane.

Procedure Complete

• WARNING •

If all attempts to restart the engine fail and a forced landing is imminent, select a suitable field and prepare for the landing. If flight conditions or terrain does not permit a safe landing, CAPS deployment may be required. Refer to Section 10, Cirrus Airframe Parachute System (CAPS) **for CAPS deployment scenarios and landing considerations. A suitable field should be chosen as early as possible so that maximum time will be available to plan and execute the forced landing. For forced landings on unprepared surfaces, use full flaps if possible. Be aware that use of full (100%) flaps will reduce glide distance. Full flaps should not be selected until landing is assured. Land on the main gear and hold the nose wheel off the ground as long as possible.**

Engine Failure in Flight

1. Fuel Pump .....BOOST
2. Fuel Selector .....SWITCH TANKS
3. Engine Knob ..... CHECK L, R, THEN BOTH (AS REQ'D)
4. Power Lever.....HALF OPEN
5. Mixture ..... .IDLE CUTOFF THEN SLOWLY ADVANCE UNTIL ENGINE STARTS
6. Starter (Propeller not windmilling) .....ENGAGE
7. Mixture .....TOP OF GREEN ARC

◆If engine start is successful:

a. CHTs and Oil Temperature ..... WARM ENGINE AT PARTIAL POWER UNTIL IN GREEN ARC

b. Land as soon as practicable.

Procedure Complete

◆If engine start is unsuccessful:

a. Perform Emergency Landing w/o Power Checklist.

Procedure Complete

• WARNING •

If engine failure is accompanied by fuel fumes in the cockpit, or if internal engine damage is suspected, move Mixture Control to CUTOFF, Fuel Selector to OFF, and do not attempt a restart.
If a turn back to the runway is elected, be very careful not to stall the airplane.

• NOTE •

If the engine fails at altitude, pitch as necessary to establish best glide speed. While gliding toward a suitable landing area, attempt to identify the cause of the failure and correct it. If altitude or terrain does not permit a safe landing, CAPS deployment may be required. Refer to Section 10, Cirrus Airframe Parachute System (CAPS) for CAPS deployment scenarios and landing considerations

(Continued on next page)

(Continued)

• NOTE •

Excessive engine cooling may be experienced during long descents resulting in low engine oil and cylinder head temperatures. This may result in the engine not accelerating properly when power is reapplied. If oil or cylinder head temperatures are excessively low then the engine should be operated at partial power until the temperatures are sufficient for full power operation.

Above 18,000 Feet

The manifold pressure should be maintained at or above 15 in.Hg (bottom of the green arc on the manifold pressure gauge) when the aircraft is operating above 18,000 feet. If the manifold pressure is reduced below 15 in.Hg and the Power Lever positioned close to or at idle, the engine may cease combustion. Upon advancing the Power Lever, if the wind milling engine does not immediately regain power, the following procedure should be used:

1. Fuel Pump ..... BOOST
2. Power Lever ..... HALF OPEN
3. Mixture ..... FULL RICH, THEN LEAN UNTIL ENGINE STARTS, THEN SLOWLY ADVANCE TO FULL RICH
4. Power Lever ..... AS REQUIRED
5. Mixture ..... AS REQUIRED
6. Fuel Pump ..... AS REQUIRED

Procedure Complete

(Continued on next page)

(Continued)

Possible Engine Failure Causes

Improper Fuel Management: If the engine failure cause is determined to be improper fuel management, turn off Fuel Pump and resume fight.
Engine Driven Fuel Pump Failure: If fuel management is correct, failure of the engine driven fuel pump or a clogged fuel filter is probable. Reduce power to 75% or less and land as soon as practicable. Do not set the mixture too rich for descent or landing.
Improper Mixture Setting: If fuel management is correct and the engine driven fuel pump is functioning properly, it is possible the mixture is either too lean or too rich.
Possible over rich conditions:

- Very low power settings at high altitude and rich mixture.
- Very low power settings with the fuel pump on and rich mixture.
- Severe induction system blockage, leakage, or turbo failure and rich mixture.

Possible over lean conditions:

- Advancing the throttle from a lean condition before enriching the mixture.
- HIGH BOOST/PRIME switched off from a lean condition before enriching the mixture.
- Vapor in fuel line (likely to happen in very hot ambient conditions at altitude).
- High altitude descent in lean condition with no corresponding throttle or mixture change.

Engine Failure On Takeoff - Low Altitude

1. Best Glide or Landing Speed ..... ESTABLISH
2. Fuel Selector ..... OFF
3. Flaps ..... AS REQUIRED
4. Land straight ahead.

◆ If time permits:

a. Power Lever ..... IDLE
b. Mixture ..... CUTOFF
c. Fuel Pump ..... OFF
d. Seat Belts ..... SECURED
e. BAT/ALT Switches ..... OFF

Procedure Complete

• WARNING •

If engine failure is accompanied by fuel fumes in the cockpit, or if internal engine damage is suspected, move Mixture Control to CUTOFF, Fuel Selector to OFF, and do not attempt a restart.
If a turn back to the runway is elected, be very careful not to stall the airplane.

• NOTE •

If the engine fails immediately after becoming airborne, abort on the runway if possible. In most cases, when the engine fails below 600 feet AGL, the landing should be made straight ahead, turning only to avoid obstructions. In such a case, lower the nose to maintain airspeed and establish a glide attitude. If the engine fails between 600 feet and 2000 feet AGL, CAPS activation most likely is the safest option. After establishing a glide for landing or activating CAPS, perform as many of the checklist items as time permits.

Delay turning off BAT 2 until immediately before impact. BAT 2 will provide power to the PFD and essential bus for continued display of flight instrumentation.

Engine Fire During Start

1. Mixture ..... CUTOFF
2. Fuel Pump ..... OFF
3. Fuel Selector ..... OFF
4. Power Lever ..... FORWARD
5. Starter ..... ENGAGE

◆If flames persist:

a. Evacuate aircraft.

Procedure Complete

• NOTE •

A fire during engine start may be caused by fuel igniting in the fuel induction system. If this occurs, attempt to draw the fire back into the engine by continuing to start the engine.

Engine Fire In Flight

1. Mixture ..... CUTOFF
2. Fuel Pump ..... OFF
3. Fuel Selector ..... OFF
4. Airflow Selector ..... OFF
5. Power Lever ..... IDLE
6. Engine Knob ..... OFF

7. Perform Emergency Landing w/o Power.

Procedure Complete

• WARNING •

If an engine fire occurs during flight, do not attempt to restart the engine.

• NOTE •

In the event of sustained engine fire in flight, airspeed and altitude indication may become unreliable.

Engine Partial Power Loss

1. Air Conditioner (if installed) ..... OFF
2. Fuel Pump ..... HIGH BOOST/PRIME
3. Fuel Selector ..... SWITCH TANKS, LEAVE COVER OPEN
4. Mixture ..... CHECK APPROPRIATE FOR FLIGHT CONDITIONS
5. Power Lever ..... SWEEP
6. Engine Knob ..... CHECK L, R, THEN BOTH AS REQ'D
7. Land as soon as practicable.

Procedure Complete

• WARNING •

If there is a strong smell of fuel in the cockpit, divert to the nearest suitable landing field. Fly a forced landing pattern and shut down the engine fuel supply once a safe landing is assured.

• NOTE •

Indications of a partial power loss include fluctuating RPM, reduced or fluctuating manifold pressure, low oil pressure, high oil temperature, and a rough-sounding or rough-running engine. Mild engine roughness in flight may be caused by one or more spark plugs becoming fouled. A sudden engine roughness or misfiring is usually evidence of a magneto malfunction.

If for any reason the aircraft experiences an unexpected loss of normal manifold pressure perform the Unexpected Loss Of Manifold Pressure Checklist.

(Continued on next page)

(Continued)

• NOTE •

Low oil pressure may be indicative of an imminent engine failure. See OIL PRESSURE Warning Checklist in this Section for special procedures with low oil pressure.

A damaged (out-of-balance) propeller may cause extremely rough operation. If an out-of-balance propeller is suspected, immediately shut down engine and perform Emergency Landing, Ditching, or Emergency Landing w/o Power Checklist as appropriate.

If the power loss is due to a fuel leak in the injector system, fuel sprayed over the engine may be cooled by the slipstream airflow which may prevent a fire at altitude. However, as the Power Lever is reduced during descent and approach to landing the cooling air may not be sufficient to prevent an engine fire.

Selecting HIGH BOOST/PRIME may clear the problem if vapor in the injection lines is the problem or if the engine-driven fuel pump has partially failed. The electric fuel pump will not provide sufficient fuel pressure to supply the engine if the engine-driven fuel pump completely fails.

Selecting the opposite fuel tank may resolve the problem if fuel starvation or contamination in one tank was the problem. Leave the fuel selector cover open and operate the tank selector manually, if needed.

Cycling the Engine Knob momentarily from BOTH to L and then to R may help identify the problem. An obvious power loss in single ignition operation indicates magneto or spark plug trouble. Lean the mixture to the recommended cruise setting. If engine does not smooth out in several minutes, try a richer mixture setting. Return Engine Knob to the BOTH position unless extreme roughness dictates the use of a single magneto.

If a partial engine failure permits level flight, land at a suitable airfield as soon as conditions permit. If conditions do not permit safe level flight, use partial power as necessary to set up a forced landing pattern over a suitable landing field. Always be prepared for a complete engine failure and consider CAPS deployment if a suitable landing site is not available. Refer to Section 10, Cirrus Airframe Parachute System (CAPS) for CAPS deployment scenarios and landing considerations.

Ice Protection System Failure/ Excessive Ice Accumulation

1. ICE PROTECT 1 (A4) and 2 (B4) Circuit Breakers.....SET
2. IPS Tank Select.....SWITCH TO FULLER TANK
3. W/S Push-Button.....PRESS
   a. Repeat operation of windshield pump to verify metering pumps are primed properly as evidenced by deicing fluid exiting windshield nozzles.
4. ICE PROTECT Mode Switch.....VERIFY HIGH
5. BKUP Switch ..... ON

◆ If determined windshield pump is not priming:

a. Exit icing conditions immediately.

b. Airspeed.....95 KIAS OR GREATER

(1) Maintain a minimum airspeed of 95 KIAS or higher to stay above pre-stall buffet. If unable to maintain this airspeed, allow altitude to decrease in order to maintain 95 KIAS.

c. Minimum Approach Speed w/ Residual Ice (Flaps 50%) ..... 88 KIAS

• WARNING •

In severe icing conditions, it may not be possible to maintain altitude or proper glide path on approach; in this case, it is imperative that a safe airspeed be maintained, the stall warning system may not function and there may be little or no pre-stall buffet with heavy ice loads on the wing.

d. Flaps.....MINIMUM REQUIRED

• CAUTION •

When landing is assured, select the minimum flap setting required, not to exceed 50%, and maintain extra airspeed consistent with available field length. Do not retract the flaps once they have been extended unless required for go-around.

Procedure Complete

Inadvertent Spin Entry

1. CAPS ..... ACTIVATE

Procedure Complete

• WARNING •

In all cases, if the aircraft enters an unusual attitude following or in connection with a stall, a spin condition should be assumed and, immediate deployment of the CAPS is required. Under no circumstances should spin recovery other than CAPS deployment be attempted.

• NOTE •

The aircraft is not approved for spins, and has not been certified for traditional spin recovery characteristics. The only approved and demonstrated method of spin recovery is activation of the Cirrus Airframe Parachute System (see CAPS Deployment Checklist, this section). Because of this, if the aircraft enters a spin, CAPS must be deployed immediately.

While the stall characteristics of the aircraft make inadvertent entry into a spin extremely unlikely, it is possible. Spin entry can be avoided by using good airmanship: coordinated use of controls in turns, proper airspeed control following the recommendations of this Handbook, and never abusing the flight controls with uncoordinated or abrupt inputs when close to the stall (see Section 4, Stalls discussion).

If, at the stall, the controls are misapplied and abused aggressive inputs are made to the elevator, rudder and/or ailerons, an abrupt wing drop may be felt and a spin may be entered.

Landing Without Elevator Control

1. Flaps 50%
2. Trim ..... 80 KIAS
3. Power ..... AS REQUIRED FOR GLIDE ANGLE

Procedure Complete

• CAUTION •

The pitch trim spring cartridge is attached directly to the elevator and provides a backup should you lose the primary elevator control system. Set elevator trim for a 80 KIAS approach to landing. Thereafter, do not change the trim setting until in the landing flare. During the flare, the nose-down moment resulting from a power reduction may cause the airplane to hit on the nose-wheel. At touchdown, bring the power lever to idle.

Overboost / Pressure Relief Valve

1. Power Lever ..... REDUCE TO 30.5 IN.HG OR LESS
2. Mixture ..... ADJUST FUEL FLOW TO TOP OF GREEN ARC

◆ If noticeable surging is present:

a. Land as soon as practicable.

Procedure Complete

• NOTE •

Although it is an unlikely failure mode, the wastegate may be stuck in a closed position. If pressure relief valve is obviously surging (cycling high manifold pressure followed by sudden drop to lesser pressure, may be accompanied by "pop" noise), it may be evidence of MAP controller setting problem but may also be evidence of a seized wastegate. Engine will be adequately protected by the pressure relief valve, but turbo overspeed may result in turbo failure if pressure relief valve remains OPEN. Reducing manifold pressure (via power lever) will decrease the airflow through the engine, thereby reducing the energy available to drive the turbine; enriching the mixture will maintain lower turbine temperatures. It is unnecessary to descend prematurely, lower altitudes (higher density air) may aggravate the condition.

Power Lever Linkage Failure

1. Power Lever Movement .....VERIFY
2. Power.....SET IF ABLE
3. Flaps ..... SET IF NEEDED
4. Mixture ..... AS REQUIRED (FULL RICH TO CUTOFF)
5. Land as soon as possible.

Procedure Complete

• **NOTE** •

If the Power Lever linkage fails in flight, the engine will not respond to power lever control movements. Use power available and flaps as required to safely land the airplane.

If the power lever is stuck at or near the full power position, proceed to a suitable airfield. Fly a forced landing pattern. With landing assured, shut down engine by moving mixture control full aft to CUTOFF. If power is needed again, return mixture control to FULL RICH and regain safe pattern parameters or go-around. If airspeed cannot be controlled, shut engine down and perform the Emergency Landing, Ditching, or Emergency Landing w/o Power Checklist as appropriate. After landing, bring the airplane to a stop and complete the Emergency Engine Shutdown On Ground Checklist.

If the power lever is stuck at or near the idle position and straight and level flight cannot be maintained, establish glide to a suitable landing surface. Fly a forced landing pattern.

Propeller Governor Failure

1. Power Lever ..... REDUCE TO MINIMUM NECESSARY FOR SUSTAINED FLIGHT
2. Airspeed ..... REDUCE TO 85-90 KIAS
3. Land as soon as practicable.

Procedure Complete

• NOTE •

An in-flight governor failure will likely result in a large exceedance (3000 RPM or more), as propeller blade angle will go to fine pitch. Failure may be evidence of engine oil pressure or volume loss, typically accompanied by OIL PRESSURE warning.

Propeller becomes a fixed pitch propeller; reducing speed to 85-90 KIAS and using only power necessary for sustained flight at that speed will minimize the overspeed.

Rejected Takeoff

1. Brakes .....MAXIMUM PILOT EFFORT W/O SKIDDING
2. Power Lever ..... IDLE

   After airplane comes to a complete stop:
3. Brakes .....COOL DOWN

Procedure Complete

• CAUTION •

For maximum brake effectiveness, retract flaps, hold control yoke full back, and bring the airplane to a stop by smooth, even application of the brakes.

Do not set the parking brake following a Rejected Takeoff.

A cool down period and brake overheat inspection are required after high-energy braking events.

• NOTE •

Use as much of the remaining runway as needed to safely bring the airplane to a stop or to slow the airplane sufficiently to turn off runway.

Smoke and Fume Elimination

1. Air Conditioner ..... RECIRC DISABLED
2. Temperature Selector ..... COLD
3. Vent Selector ..... FEET/PANEL/DEFROST
4. Airflow Selector ..... MAXIMUM
5. Fuel Selector ..... MANUAL MODE

◆ If source of smoke and fume is firewall forward:

   a. Airflow Selector ..... OFF

6. Panel Vents ..... OPEN
7. Supplemental Oxygen (if installed)
   a. Oxygen Masks or Cannulas ..... DON
   b. Oxygen System (OXY Switch) ..... ON
   c. Oxygen Flow Rate ..... MAXIMUM
8. Land as soon as possible.

Procedure Complete

• WARNING •

Use Oxygen System only if flames and heat are not present.

• NOTE •

In addition to the procedures described above, pilot and passengers should don masks and use the oxygen system at the maximum flow rate until smoke and fumes have cleared.

If smoke and/or fumes are detected in the cabin, check the engine parameters for any sign of malfunction. If a fuel leak has occurred, actuation of electrical components may cause a fire. If there is a strong smell of fuel in the cockpit, divert to the nearest suitable landing field. Perform Emergency Landing w/o Power Checklist and shut down the fuel supply to the engine once a safe landing is assured.

Unexpected Loss Of Manifold Pressure

1. Power ..... ADJUST TO MINIMUM REQUIRED FOR SUSTAINED FLIGHT
2. Mixture .....ADJUST FOR EGTS BETWEEN 1300 TO 1400 °F
3. Descend to MINIMUM SAFE ALTITUDE from which a landing may be safely accomplished.
4. Divert to nearest suitable airfield.
5. Oil Pressure..... MONITOR
6. Land as soon as possible.

Procedure Complete

• **NOTE** •

If the aircraft experiences an unexpected loss of normal manifold pressure, the engine will typically revert to operation similar to a normally aspirated aircraft at approximately the same altitude. However, continued flight should only be conducted to the nearest suitable landing place in order to investigate the cause of the unexpected loss of normal manifold pressure. The four most probable causes are:

1. A leak or rupture at an induction system coupling or a loose or failed induction coupling hose clamp.
   a. This condition does not usually present a significant hazard, other than power loss equivalent to a naturally aspirated engine.
   b. While this condition is the most probable, the following three conditions may present an immediate hazard to continued safe flight. Because it is difficult for the pilot to distinguish between a simple induction system leak and any of the more hazardous causes, all unexpected losses of manifold pressure should be assumed hazardous.

(Continued on next page)

(Continued)

2. A significant leak in the exhaust system.
   a. An exhaust leak may present a possible fire hazard. Reducing power and adjusting the mixture as described reduces the possibility of an engine compartment fire.
3. A loss of oil pressure to the wastegate actuator due to a general loss of engine oil pressure.
   a. Potentially caused by a failed oil line, oil line fitting, or oil pump.
   b. Failure to maintain normal full manifold pressure at altitude may be an early indication of an oil leak and impending further loss of oil pressure.
   c. Monitor for reduction in oil pressure; if observed continue for diversion airfield, but prepare for forced landing.
4. A failure of an internal component in the turbocharger.
   a. If the pilot experiences a sudden loss of manifold pressure and later observes declining oil pressure, it is may be due to a failure of an internal turbocharger component. If there is a loss of oil pressure due to a failure of the turbocharger, engine oil may be vented through the tail pipe overboard.
   b. Monitor for reduction in oil pressure; if observed continue for diversion airfield, but prepare for forced landing.

Wing Fire In Flight

1. Probe Heat Switch (if installed) ..... OFF
2. STALL VANE HEAT (D3) & PITOT HEAT (D2) CBs ..... PULL
3. NAV LIGHTS (D5) Circuit Breaker ..... PULL
4. Landing Lights (LAND Switch) ..... OFF
5. Strobe Lights (STRB Switch) ..... OFF
6. AP DISC Button ..... PRESS AND HOLD
7. If possible, side slip to keep flames away from fuel tank and cabin.

8. Land as soon as possible.

Procedure Complete

• CAUTION •

Putting the airplane into a dive may blow out the fire. Do not exceed V_{NE} during the dive.

Emergency CAS Procedures

AOA OVERHEAT Warning

AOA OVERHEAT

Stall warning/AoA heater has failed.

1. Probe Heat Switch (if installed) ..... OFF
2. STALL VANE HEAT (D3) Circuit Breaker ..... PULL
3. Icing Conditions ..... AVOID/EXIT

Procedure Complete

• **NOTE** •

Serials w/ Probe Heat Switch: Operation of Probe Heat Switch on hot days may annunciate the AOA OVERHEAT Warning when flying at slow speeds. When air temperatures are greater than 41 °F (5 °C), operation of Probe Heat is at discretion of the pilot. If overheat warning is annunciated, Probe Heat should remain OFF until air temperatures decrease.

APPROACH SPEED Warning

APPROACH SPEED

Approach speed is too high.

1. Approach ..... GO-AROUND

Procedure Complete

AUTO DESCENT Warning

AUTO DESCENT

Automatic descent to 14,000FT in 60 seconds.
Aircraft descending to 14,000FT.
Aircraft descending to 12,500FT.
Aircraft descended due to pilot incapacitation.

1. Situation.....ASSESS

• WARNING •

Pilot should carefully assess aircraft state, altitude, location, and physiological fitness to maintain continued safe flight.

◆ If hypoxia is suspected and oxygen is installed:

a. Oxygen Masks or Cannulas.....DON
b. Oxygen System (OXY Switch) .....ON
c. Oxygen Flow Rate .....MAXIMUM

◆ If pilot is fit and autopilot has not begun descent:

a. Perform one or more of the following actions to reset hypoxia alert, as appropriate:
   - Press softkeys on GDUs, GTCs, or GMC 707
   - Press GTC Knob(s)
   - Acknowledge prompt(s) on GTC touchscreen(s)

◆ If pilot is fit, autopilot is engaged, and a descent is initiated:

a. AP DISC.....PRESS
b. Selected Altitude ..... RESET TO DESIRED
c. Autopilot .....ENGAGE

Procedure Complete

(Continued on next page)

AUTO DESCENT

(Continued)

• **NOTE** •

No pilot response to the HYPOXIA ALERT annunciation detected after one minute. Warning remains until pilot responds. Automatic descent begins after one minute of unanswered Warning. Once it begins, automatic descent will commence to 14,000 feet for 4 minutes, then to 12,500 feet thereafter. Once descent begins, only autopilot disconnect will interrupt this process.

Serials w/ Safe Return Autoland: Unless canceled, Safe Return Autoland will activate descending through 15,000 feet pressure altitude and change route to an emergency landing airport.

Refer to Section 10: Safety Information, "Pilot Incapacitation".

CHT Warning

CHT

Cylinder head temperature is high.

◆ If on ground:

a. Power Lever ..... REDUCE TO IDLE

b. Mixture ..... FULL RICH

c. Annunciations and Engine Temperatures ..... MONITOR

❍ If Warning annunciation is still illuminated, and temperatures not decreasing:

(1) Shutdown engine.
(2) Do not dispatch.

Procedure Complete

◆ If in flight:

a. Power Lever ..... REDUCE

b. Mixture ..... ADJUST FUEL FLOW TO TOP OF GREEN ARC

c. Airspeed ..... INCREASE

d. Annunciations and Engine Temperatures ..... MONITOR

❍ If Warning annunciation is still illuminated:

(1) Power Lever ..... MINIMUM REQUIRED
(2) Engine Instruments ..... MONITOR

❑ If Warning is extinguished and Caution is illuminated:

(a) Land as soon as practicable.

❑ If Warning annunciation remains illuminated:

(a) Land as soon as possible.

Procedure Complete

CO LEVEL HIGH Warning

CO LEVEL HIGH

Carbon monoxide level is too high.

1. Air Conditioner ..... RECIRC DISABLED
2. Temperature Selector ..... COLD
3. Vent Selector ..... FEET/PANEL/DEFROST
4. Airflow Selector ..... MAXIMUM
5. Panel Vents ..... OPEN

◆ If message does not extinguish:

a. Supplemental Oxygen (if available)

(1) Oxygen Masks or Cannulas ..... DON
(2) Oxygen System (OXY Switch) ..... ON
(3) Oxygen Flow Rate ..... MAXIMUM

b. Land as soon as possible.

Procedure Complete

• WARNING •

Annunciation indicates carbon monoxide level is greater than 50 PPM. Ensure that air conditioner is not in recirculate mode and that air temperature is set to full COLD to supply maximum amount of fresh air to cabin.

EMER AUTOLAND ACTIVATING Warning

EMER AUTOLAND ACTIVATING

Emergency Autoland is activating.

◆ If Safe Return Autoland activation is not desired:

a. AP DISC Button.....PRESS AND HOLD 1 SECOND

❍ If Safe Return Autoland activation has proceeded beyond 10-second EMER AUTOLAND ACTIVATING period:

• NOTE •

Safe Return Autoland will immediately squawk 7700, change the flight plan, and may change the altimeter setting.

(1) Transponder..... SET
(2) FMS ..... A/R
(3) Altimeter..... SET

Procedure Complete

❍ If malfunction of Safe Return Autoland activation is suspected:

(1) EMER AUTOLAND CB (A13) ..... PULL
(2) Perform Automatic Flight Control Malfunction checklist.

Procedure Complete

◆ If Safe Return Autoland activation is desired:

a. No further action required.

• NOTE •

Refer to Section 8: Handling and Servicing, "Safe Return Autoland Runway Recovery".

Procedure Complete

ESSENTIAL BUS VOLTS Warning

ESSENTIAL BUS VOLTS

Check essential power bus voltage.

1. Essential Bus Voltage (ESS Bus V) ..... CHECK

◆ If Essential Bus Voltage is greater than 32 Volts:

a. Main Bus 1 and Main Bus 2 Voltages ..... CHECK

❍ If Main Bus 1 voltage is high:

(1) ALT 1 (D11) Circuit Breaker ..... SET
(2) ALT 1 Switch ..... CYCLE

❍ If Main Bus 2 voltage is high:

(1) ALT 2 (B5) Circuit Breaker ..... SET
(2) ALT 2 Switch ..... CYCLE

◆ If unable to restore at least one alternator:

a. Non-Essential Loads ..... REDUCE

❍ If flight conditions permit, consider shedding:

(1) Air Conditioning ..... OFF
(2) Cabin Fan ..... OFF
(3) Landing Lights (LAND Switch) ..... OFF
(4) Probe Heat Switch (if installed) ..... OFF
(5) STALL VANE HEAT (D3) & PITOT HEAT (D2) CBs ..... PULL
(6) Strobe Lights (STRB Switch) ..... OFF
(7) COM 2/AUDIO PANL (C12) Circuit Breaker ..... PULL
(8) YAW SERVO (C1) Circuit Breaker ..... PULL
(9) IRIDIUM DATA (B15) Circuit Breaker (if installed) ..... PULL

2. Land as soon as practicable.

Procedure Complete

(Continued on next page)

(Continued)

• CAUTION •

Dependent on battery state, flaps and landing light may be unavailable on landing.

• NOTE •

Essential Bus voltage is high or low. High voltage indicates alternator voltage regulator failure; will typically be associated with high M1 and/or M2 voltages and MAIN BUS 1 VOLTS Warning and/or MAIN BUS 2 VOLTS Warning messages. Low voltage indicates dual failures of Alternators 1 and 2, will typically be associated with low M1 and M2 voltages, MAIN BUS 1 VOLTS Caution and MAIN BUS 2 VOLTS Caution messages, and ALTERNATOR 1 CURRENT Caution and ALTERNATOR 2 CURRENT Caution messages.

FLAPS ICE Warning

FLAPS ICE

Full flaps prohibited in icing conditions.

1. Flaps ..... SET UP OR 50%

Procedure Complete

• WARNING •

Maximum flap deflection in icing conditions is limited to 50%.

FUEL FLOW Warning

FUEL FLOW

Check fuel flow.

◆ If warning occurs during takeoff roll:

a. Takeoff .....ABORT

Procedure complete

◆ If warning occurs on ground, not during takeoff roll:

a. Power Lever .....REDUCE

b. Do not dispatch.

Maintenance required to reduce fuel flow.

Procedure Complete

◆ If in flight:

a. Mixture Lever.....ADJUST FUEL FLOW TO TOP OF GREEN ARC

b. Annunciations and Engine Temperatures..... MONITOR

Procedure Complete

• **NOTE** •

Excessively high fuel flows may lead to loss of engine power and may cause the engine to fail. If fuel flow exceeds dynamic red line, maintenance is required.

FUEL IMBALANCE Warning

FUEL IMBALANCE

Fuel quantity imbalance has been detected.

1. Fuel Quantity Gauges ..... CHECK
2. Fuel Selector ..... SELECT FULLER TANK

Procedure Complete

• NOTE •

Fuel level imbalance (between left and right) is greater than 12 gallons. Leave the fuel selector cover open until tanks are balanced.

FUEL LOW LEFT Warning

FUEL LOW LEFT

Left fuel tank is nearly empty.

1. Fuel Quantity Gauges ..... CHECK
2. Fuel Selector ..... RIGHT TANK, LEAVE COVER OPEN

Procedure Complete

• WARNING •

Failure to leave the fuel selector cover open may result in the AFSS selecting a nearly empty fuel tank.

• NOTE •

Left fuel tank sensed quantity is less than or equal to 1 gallon.

FUEL LOW RIGHT Warning

FUEL LOW RIGHT

Right fuel tank is nearly empty.

1. Fuel Quantity Gauges ..... CHECK
2. Fuel Selector ..... LEFT TANK, LEAVE COVER OPEN

Procedure Complete

• WARNING •

Failure to leave the fuel selector cover open may result in the AFSS selecting a nearly empty fuel tank.

• NOTE •

Right fuel tank sensed quantity is less than or equal to 1 gallon.

FUEL LOW TOTAL Warning

FUEL LOW TOTAL

Total fuel quantity is low.

1. Fuel Quantity Gauges ..... CHECK
2. Totalized Fuel Quantity ..... CHECK

◆ If totalized fuel quantity differs significantly from sensed quantity:

a. Initial Fuel Value ..... VERIFY AND CORRECT

◆ If message persists:

a. Land as soon as practicable.

Procedure Complete

• NOTE •

Fuel Totalizer or sensed quantity is less than or equal to 9 gallons.

IPS CONTROL FAIL Warning

IPS CONTROL FAIL

IPS valves cannot be closed.

1. Icing Conditions ..... AVOID/EXIT

Procedure Complete

IPS FLUID LOW Warning

IPS FLUID LOW

IPS fluid quantity is low.

1. Icing Conditions ..... AVOID/EXIT

Procedure Complete

• NOTE •

Depending on the selected flow rate, IPS FLUID LOW annunciation may occur at lower fluid quantities.

Fluid is less than or equal to 0.5 gallon.

IPS QUANTITY FAIL Warning

IPS QUANTITY FAIL

Left and right IPS fluid quantities are unknown.

1. Icing Conditions ..... AVOID/EXIT

Procedure Complete

MAIN BUS 1 VOLTS Warning

MAIN BUS 1 VOLTS

Check voltage on main power bus 1.

1. ALT 1 Switch ..... CYCLE
2. Main Bus 1 Voltage ..... CHECK

◆ If Main Bus 1 Voltage is greater than 32 volts:

a. ALT 1 Switch ..... OFF

b. Perform ALTERNATOR 1 CURRENT Caution Checklist (do not reset alternator).

Procedure Complete

• NOTE •

Main Bus 1 Voltage is excessive, indicates an alternator 1 voltage regulator failure; will typically be associated with abnormally high voltage indications on M1, M2 and ESS buses, may also be associated with MAIN BUS 2 VOLTS Warning or ESSENTIAL BUS VOLTS Warning message.

MAIN BUS 2 VOLTS Warning

MAIN BUS 2 VOLTS

Check voltage on main power bus 2.

◆ If Main Bus 1 VOLTS Warning is also asserted:

a. Perform MAIN BUS 1 VOLTS Warning Checklist.

◆ If Main Bus 1 VOLTS Warning is not also asserted:

a. ALT 1 Switch ..... OFF
b. Main Bus 2 Voltage ..... CHECK
c. ALT 1 Switch ..... ON
d. Main Bus 1 Voltage ..... CHECK
e. Main Bus 2 Voltage ..... CHECK

◆ If Main Bus 2 Voltage is greater than 32 volts with ALT 1 off:

a. ALT 2 Switch ..... CYCLE
b. Main Bus 2 Voltage ..... CHECK

❍ If Main Bus 2 Voltage remains greater than 32 volts:

(1) ALT 2 Switch ..... OFF

Procedure Complete

• **NOTE** •

Main Bus 2 Voltage is excessive. Indicates an alternator voltage regulator failure; will typically be associated with abnormally high bus voltage indications on M2 and ESS, may also be associated with MAIN BUS 1 VOLTS Warning and ESSENTIAL BUS VOLTS Warning Messages.

MANIFOLD PRESSURE Warning

MANIFOLD PRESSURE

Check manifold pressure.

1. Power Lever..... REDUCE MAP TO LESS THAN 36.5 IN.HG
2. Flight ..... CONTINUE

◆ If noticeable surging is present:

a. Perform Overboost / Pressure Relief Valve Checklist.

Procedure Complete

• **NOTE** •

High Manifold Pressure may be a result of cold oil and the effect of high associated oil pressure on the wastegate controller. Maintain power at or below 36.5 in.Hg by power lever management. If High Manifold Pressure persists when oil temperatures are greater than 150 °F, MAP controller requires a maintenance adjustment. If engine surges are associated, MAP may be exceeding pressure relief valve (pop-off valve) threshold. Relief valve will protect induction manifolds from excessive pressure, but it may be a sign of a failed closed wastegate; if this is observed or suspected, complete the Overboost / Pressure Relief Valve Checklist.

OIL PRESSURE Warning

OIL PRESSURE

Oil pressure is out of range.

1. Oil Pressure Gauge ..... CHECK

◆ If pressure low / high:

a. Power..... REDUCE TO MINIMUM FOR SUSTAINED FLIGHT

b. Land as soon as possible.

(1) Prepare for potential engine failure.

Procedure Complete

• NOTE •

It is possible for sensors to produce erroneous warnings. Carefully evaluate other engine parameters and smoothness of operation before taking action.

If oil pressure is low, the engine has probably lost a significant amount of its oil and engine failure may be imminent.

If oil pressure is suddenly high, a blockage or obstruction may have developed in the oil circulation system and engine failure may be imminent.

OIL TEMP Warning

OIL TEMP

Oil temperature is high.

1. Power ..... REDUCE
2. Airspeed ..... INCREASE
3. Mixture ..... ADJUST FUEL FLOW TO TOP OF GREEN ARC
4. Oil Temperature Gauge ..... MONITOR

◆ If message persists:

a. Land as soon as possible.

Procedure Complete

OXYGEN FAULT Warning

OXYGEN FAULT

Oxygen system fault - Above 12,500 Ft

1. Oxygen Flow Rate ..... CHECK

◆ If no flow:

a. Initiate Emergency Descent to below 12,500 ft:

(1) AP DISC Button ..... PRESS AND RELEASE
(2) Power Lever ..... IDLE
(3) Mixture ..... AS REQUIRED
(4) Airspeed ..... V_{NE}

❍ Below 12,500 ft:

(1) Oxygen System (OXY Switch) ..... OFF
(2) Flight ..... CONTINUE

Procedure Complete

◆ If flow is normal:

a. Oxygen Flow Rate ..... MONITOR

b. Initiate Normal Descent as soon as practical.

❍ Below 12,500 ft:

(1) Oxygen System (OXY Switch) ..... OFF
(2) Flight ..... CONTINUE.

Procedure Complete

• **NOTE** •

Annunciation indicates tank solenoid failed (open or closed) or flow rate is low. If flow is checked and confirmed present, solenoid has failed OPEN; system will continue to provide oxygen until depleted, but unnecessary flight at altitudes requiring oxygen is not recommended.

OXYGEN QTY LOW Warning

OXYGEN QTY LOW

Oxygen quantity is low.

1. Oxygen Pressure and Flow Rate ..... CHECK
2. Initiate Normal Descent (non-emergency) below 12,500 ft.
3. Oxygen Flow Rate ..... MONITOR

◆ Below 12,500 ft:

a. Flight..... CONTINUE

Procedure Complete

• **NOTE** •

Annunciation indicates tank pressure is less than or equal to 400 PSI, see Oxygen Duration Table of the Oxygen Airplane Flight Manual Supplement (AFMS) to determine duration.

OXYGEN REQUIRED Warning

OXYGEN REQUIRED

Oxygen usage is required.

1. Oxygen System (OXY Switch) ..... ON
2. Oxygen Mask/Cannula ..... DON
3. Oxygen Flow Rate ..... SET AND MONITOR

Procedure Complete

• **NOTE** •

Annunciation indicates the aircraft is above 12,500 with oxygen system OFF for 40 minutes or when aircraft is above 14,000 ft and the oxygen system is not ON.

RPM Warning

RPM

Check engine RPM.

1. Power Lever.....REDUCE BY 2 IN.HG MANIFOLD PRESSURE

◆ If governor is not in control (RPM reduces and remains lower after power adjustment):

a. Perform Propeller Governor Failure Checklist.

Procedure Complete

◆ If governor is in control (RPM remains high, but stable after power reduction):

a. Power Lever ....REDUCE BELOW 34 IN.HG FOR CLIMB, BELOW 30.5 IN.HG FOR CRUISE

Procedure Complete

◆ If governed engine speed exceeds 2600 RPM:

a. Perform Propeller Governor Failure Checklist.

Procedure Complete

◆ If governed engine speed is 2600 RPM or less:

a. Flight.....CONTINUE

Procedure Complete

• NOTE •

Propeller governor is set in a fixed position, governed RPM is not directly influenced by cabin controls. If propeller speed remains stable after power lever is initially reduced (some over/undershoot normal as governor adjusts blade angle), governor is functioning normally but is governing at too high a speed. If propeller speed does vary directly with power (or airspeed), behaving like a fixed pitch propeller, propeller governing system has failed and should be addressed by Propeller Governor Failure Checklist.

If governor is functional and sustaining high RPM, reducing manifold pressure will decrease the engine loads and stress. Governor will require maintenance adjustment.

SPIN SPIN SPIN Warning

SPIN SPIN SPIN

Spin Entry Detected - Initiate Recovery

1. CAPS..... ACTIVATE

Procedure Complete

• WARNING •

In all cases, if the aircraft enters an unusual attitude following or in connection with a stall, a spin condition should be assumed and, immediate deployment of the CAPS is required. Under no circumstances should spin recovery other than CAPS deployment be attempted.

• NOTE •

The aircraft is not approved for spins, and has not been certified for traditional spin recovery characteristics. The only approved and demonstrated method of spin recovery is activation of the Cirrus Airframe Parachute System (see CAPS Deployment Checklist, this section). Because of this, if the aircraft enters a spin, CAPS must be deployed immediately.

While the stall characteristics of the aircraft make inadvertent entry into a spin extremely unlikely, it is possible. Spin entry can be avoided by using good airmanship: coordinated use of controls in turns, proper airspeed control following the recommendations of this manual, and never abusing the flight controls with uncoordinated or abrupt inputs when close to the stall (see Section 4, Stalls discussion).

If, at the stall, the controls are misapplied and abused aggressive inputs are made to the elevator, rudder and/or ailerons, an abrupt wing drop may be felt and a spin may be entered.

STALL Warning

STALL

Stall imminent.

1. Angle of Attack ..... REDUCE
2. Power Lever ..... FULL FORWARD

Procedure Complete

STALL WARNING FAIL Warning

STALL WARNING FAIL

Stall warning is inoperative.

1. Airspeed ..... MAINTAIN ABOVE $1.3V_S$
2. Avoid stalls, low airspeed, and uncoordinated or abrupt control inputs.
3. Land as soon as practicable.

Procedure Complete

• WARNING •

The aircraft may not be stall protected. Stalls must be avoided when the stall warning is inoperative. Excessive altitude loss may result if the aircraft is stalled.

Departure from controlled flight or spin may occur during stall with uncoordinated aileron/rudder inputs.

Stall warning is not operative or reliable.

Stall speeds in turns or increased load factor are higher.

• Note •

Serials w/ IPS: Green donut airspeed reference will be unavailable or unreliable.

STARTER ENGAGED Warning

STARTER ENGAGED

Starter is engaged.

◆ If on ground:

a. Engine Knob ..... OFF

b. Wait 1 minute before next start attempt.

❍ If starter does not disengage (stuck button, relay or solenoid failure):

(1) BAT 1 Switch ..... OFF
(2) Mixture ..... CUTOFF
(3) Fuel Pump ..... OFF
(4) STARTER (D1) Circuit Breaker ..... PULL

Procedure Complete

◆ If in flight:

a. STARTER (D1) Circuit Breaker ..... PULL

b. Flight ..... CONTINUE

Procedure Complete

• WARNING •

Use caution after shutdown if STARTER circuit breaker required pull (failed relay or solenoid). If breaker is unknowingly or unintentionally reset, starter will instantly engage if Battery 1 power is supplied; creating a hazard for ground personnel.

• NOTE •

Starter has been engaged for more than 30 seconds (starter limit is 10 seconds); if not manually engaged, such as during difficult start, this annunciation may indicate a failure of the starter solenoid or a stuck starter button.

TIT Warning

TIT

Turbine inlet temperature is high.

1. Mixture ..... ADJUST FUEL FLOW TO TOP OF GREEN ARC
2. Engine Knob ..... CHECK L, R, THEN BOTH (AS REQ'D)

◆ If TIT remains in excess of limits:

a. Power ..... REDUCE

b. Land as soon as practicable.

Procedure Complete

• **NOTE** •

Annunciation indicates that one or both turbochargers are exceeding turbine inlet temperature limits, condition can be reduced and controlled by mixture management but may be a sign of improper combustion or magneto failure.

Section 3A: Abnormal Procedures

Table of Contents

Introduction 5
Crew Alert System (CAS) Messaging 5
Cautions 5
Advisories 5
Abnormal Procedures Guidance 5
Circuit Breakers 6
Procedure Division Symbols 6
Landing Guidance 7
Land as Soon as Practicable 7
Land as Soon as Possible 7
Abnormal Procedures 8
Brake Failure During Taxi 8
Communications Failure 8
Door Open 9
Engine Running Rough 9
Fuel Valve Malfunction 10
Heated Lift Transducer Malfunction 11
Inadvertent Icing Encounter 12
Inadvertent IMC Encounter 12
Landing With Failed Brakes 13
Landing With Flat Tire 13
Loss of All Flight Displays 14
Loss of Reliable Airspeed Indication 14
Loss of Reliable Altitude Indication 14
Windshield IPS Malfunction 15
AFCS Alerts 16
Abnormal CAS Procedures 16
ALT AIR OPEN Caution 16
ALTERNATOR 1 CURRENT Caution 17
ALTERNATOR 2 CURRENT Caution 18
AOA FAIL Advisory 18
AOA HEAT FAIL Caution 19
BATTERY 1 CURRENT Caution 20
BATTERY 1 FAIL Caution 21
BATTERY 1 FAULT Caution 21
BATTERY 1 LOW Caution 22

CHECK OXYGEN Advisory 22
CHT Caution 23
ECS RECIRC ON Advisory 23
FLAPS AIRSPEED INHIBIT Caution 24
FLAPS CLIMB Advisory 24
FLAPS DISAGREE Caution 25
FLAPS FAIL Caution 25
FLAPS SELECTOR FAIL Caution 26
FUEL IMBALANCE Advisory 26
FUEL IMBALANCE Caution 26
FUEL LOW TOTAL Caution 27
FUEL PUMP OFF Caution 27
FUEL QTY MISCOMPARE Caution 27
FUEL VALVE AUTO FAIL Caution 28
FUEL VALVE OFF Advisory 28
IPS FLUID LOW Advisory 28
IPS FLUID LOW Caution 29
IPS IMBALANCE Caution 29
IPS PRESSURE HIGH Caution 30
IPS PRESSURE LOW Caution 30
IPS PUMP BACKUP Advisory 31
IPS QUANTITY FAIL Caution 31
IPS SPEED HIGH Caution 31
IPS SPEED LOW Caution 31
IPS TEMP LOW Caution 32
MAIN BUS 1 VOLTS Caution 33
MAIN BUS 2 VOLTS Caution 34
MANIFOLD PRESSURE Caution 35
MIXTURE POSITION Caution 36
OIL PRESSURE Caution 36
OIL TEMP Caution 37
OXYGEN ON Advisory 37
OXYGEN QTY LOW Advisory 38
OXYGEN QTY LOW Caution 39
OXYGEN REQUIRED Caution 39
PARK BRAKE Caution 40
PITOT HEAT FAIL Caution 40
PROBE HEAT OFF Caution 41
SFD ALT MISCOMPARE Caution 42
SFD IAS MISCOMPARE Caution 43
SFD NO-COMPARE Advisory 43
SFD PITCH MISCOMPARE Caution 44

SFD ROLL MISCOMPARE Caution 45
STARTER ENGAGED Caution 46
TAKEOFF FLAPS Caution 47
Other System Messages 47
MFD FAN FAIL Advisory 47
PFD FAN FAIL Advisory 47

Intentionally Left Blank

Introduction

This section provides procedures for handling abnormal system and/or flight conditions which, if followed, will maintain an acceptable level of airworthiness or reduce operational risk. The guidelines described in this section are to be used when an abnormal condition exists, and should be considered and applied as necessary.

• WARNING •

If a Warning annunciation is illuminated in combination with any of the following Abnormal annunciations, the Warning annunciation takes precedence and shall be performed first.

Crew Alert System (CAS) Messaging

Cautions

Displayed in yellow against a black background, Caution CAS messages arise during situations that require immediate flight crew awareness and subsequent flight crew response.

- A flashing Caution CAS message with an accompanying aural alert requires more timely flight crew response.
- A flashing Caution CAS message with no accompanying aural alert requires flight crew response, dependent on workload.
- A non-flashing Caution CAS message with no accompanying aural alert requires attention, dependent on workload. It may also require performing maintenance or taking corrective action prior to next flight.

Advisories

Displayed in white against a black background, Advisory CAS messages arise during situations that require flight crew awareness and that may require subsequent flight crew response.

Abnormal Procedures Guidance

Although this section provides procedures for handling most abnormal system and/or flight conditions that could arise in the aircraft, it is not a substitute for proper flight training, thorough knowledge of the airplane, and recognized piloting techniques and standards. A thorough study of the information in this manual while on the ground will help you prepare for time-critical situations in the air.

Sound judgment as well as thorough knowledge of the aircraft, its characteristics, and the flight manual procedures are essential in the handling of any abnormal system and/or flight condition. In addition to the outlined items in the Abnormal Procedures, the following steps are considered part of all abnormal situations:

- Maintain Aircraft Control
- Analyze the Situation
- Take Appropriate Action

Circuit Breakers

Some procedures involve manipulating circuit breakers (CBs). The following criteria should be followed during “circuit breaker” steps:

- Intentional pulling of circuit breakers during flight, other than as required in specific procedures, may cause abnormal or unexpected system behavior and is not recommended.
- When instructed to “SET”, the appropriate circuit breaker should be checked for normal condition. If the circuit breaker is not “SET”, it may be reset only once. If the circuit breaker opens again, do not reset.
- When instructed to “PULL”, the appropriate circuit breaker should only be pulled and not reset.
- When instructed to “CYCLE”, the appropriate circuit breaker should be pulled, delayed for several seconds, and reset only once. Allow sufficient cooling time for circuit breakers that are reset through a “CYCLE” procedure.

Procedure Division Symbols

For procedures requiring pilot decision, conditional steps are indented with a symbol to designate sub-sections within the procedure. On condition, the pilot makes a decision to identify the applicable sub-section. Following the initial decision, a further sub-division of the procedure may occur. In that event, one or more additional conditions guides the pilot through the remaining decisions. Once the applicable condition(s) are identified, the pilot follows the remaining steps until the indication "Procedure Complete" is reached.

The procedure symbol levels are:

◆ First Level
  ❍ Second Level
    ❑ Third Level

Landing Guidance

Land as Soon as Practicable

The pilot may consider the convenience of future maintenance when selecting an airport to land as soon as practicable. Pilots must not overfly a suitable and practicable airport for other ground conveniences.

Land as Soon as Possible

The pilot must identify and land at the first available airport that allows for a safe approach and landing considering the approach procedures available, ceilings, visibility, winds and runway lengths.

Abnormal Procedures

Brake Failure During Taxi

1. Power Lever.....AS REQUIRED
2. Directional Control.....MAINTAIN WITH RUDDER
3. Brake Pedal(s) ..... PUMP

◆ If directional control cannot be maintained:

a. Engine Knob .....OFF

Procedure Complete

• **NOTE** •

Increasing power may allow some rudder control due to increased ground speed and airflow over the rudder.

Communications Failure

1. Switches and Controls .....CHECK
2. Frequency ..... CHANGE
3. COM 1 (B12) & COM 2/AUDIO PANL (C12) CB..... SET
4. Headset ..... CHANGE

Procedure Complete

• **NOTE** •

If, after following the checklist procedure, communication is not restored, proceed with Aeronautical Information Manual (AIM) lost communications procedures.

In the event of an audio panel power failure the audio panel connects COM 1 to the pilot's headset and speaker.

Door Open

◆ If during takeoff roll:

a. Takeoff .....ABORT

Procedure Complete

◆ If in flight:

a. Airplane Control.....MAINTAIN

b. Land as soon as practicable.

Procedure Complete

• **NOTE** •

The doors on the airplane will remain 1-3 inches open in flight if not latched. Do not allow efforts to close the door interfere with the primary task of maintaining control of the airplane. An open door is impossible to close in flight. Do not attempt to close until after landing.

Engine Running Rough

1. Mixture ..... VERIFY IN GREEN ARC
2. Fuel Selector.....SWITCH TANKS, LEAVE COVER OPEN
3. Fuel Flow ..... CHECK

◆ If fuel flow is unstable:

a. Fuel Pump.....BOOST

b. Mixture..... ADJUST TO TOP OF GREEN ARC

❍ If fuel flow continues to be unstable, and above 10,000 ft

(1) Fuel Pump .....HIGH BOOST

(2) Mixture ..... ADJUST TO TOP OF GREEN ARC

4. Manifold Pressure.....SET TO 35.5 - 36.5”

Procedure Complete

Fuel Valve Malfunction

◆ If manual fuel selector operation is difficult:

a. FUEL VALVE Circuit Breaker (C3)..... PULL

b. Fuel Selector..... LEFT OR RIGHT (AS REQ'D)

❍ If difficult operation persists:

(1) Fuel Selector .....LEAVE COVER OPEN FOR MANUAL OPERATION

Procedure Complete

❍ If condition is resolved:

(1) FUEL VALVE Circuit Breaker (C3) ..... SET

(2) Fuel Selector .....CLOSE COVER FOR AUTOMATIC OPERATION

Procedure Complete

Heated Lift Transducer Malfunction

◆ If ice forms on lift transducer vane:

a. AOA Heat Synoptic Indication ..... VERIFY ON

b. STALL VANE HEAT (D3) Circuit Breaker ..... CYCLE

c. Probe Heat Switch (if installed) ..... CYCLE OFF, ON

◆ If ice remains on lift transducer vane:

a. Stall Warning System ..... EXPECT NO RELIABLE INDICATION

This includes:

- Impending Stall Warning
- Stall Speed Indication
- Stick Shaker Vibration

b. Airspeed ..... MONITOR, DO NOT STALL

c. Fly published V_{REF} Speeds ..... MINIMUM 88 KIAS W/ 50% FLAPS

Procedure Complete

• **NOTE** •

Airframe buffet before the stall is a good indication of an impending stall.

The stall warning aural alert typically activates prematurely if there is ice accumulated on the lift transducer vane.

Inadvertent Icing Encounter

1. Probe Heat Switch (if installed) ..... ON
2. Serials w/ IPS: IPS..... ON
3. Exit icing conditions. Turn back or change altitude.
4. Temperature Selector..... HOT
5. Vent Selector.....DEFROST
6. Airflow Selector ..... MAXIMUM
7. Panel Vents ..... CLOSED

Procedure Complete

• **NOTE** •

Alternate induction air door will automatically open if required.

Inadvertent IMC Encounter

1. Airplane Control ..... ESTABLISH STRAIGHT AND LEVEL FLIGHT
2. Autopilot ..... ENGAGE TO HOLD HEADING AND ALTITUDE
3. Heading .....RESET TO INITIATE 180° TURN

Procedure Complete

• **NOTE** •

Upon entering IMC, a pilot who is not proficient in instrument flying should rely upon the autopilot to execute a 180° turn to exit the conditions. Immediate action should be made to turn back as described above.

Landing With Failed Brakes

◆ One brake inoperative:

a. Land on the side of runway corresponding to the inoperative brake.
b. Maintain directional control using rudder and working brake.

Procedure Complete

◆ Both brakes inoperative:

a. Divert to the longest, widest runway with the most direct headwind.
b. Land on downwind side of the runway.
c. Use the rudder for obstacle avoidance.
d. Perform Emergency Engine Shutdown On Ground Checklist.

Procedure Complete

• **NOTE** •

Rudder effectiveness will decrease with decreasing airspeed.

Landing With Flat Tire

◆ Main Gear:

a. Land on the side of the runway corresponding to the good tire.
b. Maintain directional control with the brakes and rudder.
c. Do not taxi. Stop airplane and perform a normal engine Shutdown.

Procedure Complete

◆ Nose Gear:

a. Land in the center of the runway.
b. Hold the nosewheel off the ground as long as possible.
c. Do not taxi. Stop airplane and perform a normal engine Shutdown.

Procedure Complete

• **NOTE** •

If a flat tire or tread separation occurs during takeoff and you cannot abort, land as soon as conditions permit.

Loss of All Flight Displays

1. BAT 1 and BAT 2 Switches ..... VERIFY ON
2. ALT 1 and ALT 2 Switches ..... VERIFY ON
3. Land as soon as possible.

Procedure Complete

Loss of Reliable Airspeed Indication

1. Probe Heat Switch (if installed) ..... ON
2. AP DISC Button ..... PRESS
3. AP CTRL (A3) Circuit Breaker ..... PULL
4. Land as soon as practicable.

Procedure Complete

• **NOTE** •

If only the airspeed indicator is providing erroneous information, and in icing conditions, the most probable cause is Pitot ice. If setting Probe Heat ON does not correct the problem, descend to warmer air. If an approach must be made with a blocked Pitot tube, use known pitch and power settings and the GPS ground speed indicator, taking surface winds into account.

Loss of Reliable Altitude Indication

1. Alternate Static Source ..... OPEN

Procedure Complete

• **NOTE** •

Reference GPS AGL (GAGL) displayed on the PFD.

Windshield IPS Malfunction

1. ICE PROTECT 1 (A4) Circuit Breaker..... CYCLE
2. Fluid Quantity .....SWITCH TO FULLER TANK
3. W/S Push-Button ..... PRESS AS REQUIRED

   ◆ If forward field of view is overly restricted during landing, approach, and taxiing:

   a. Temperature Selector.....HOT
   b. Vent Selector ..... DEFROST
   c. Airflow Selector .....MAXIMUM
   d. Panel Vents.....CLOSED
   e. Execute a forward slip as required for visibility.
   f. Avoid taxiing without adequate forward visibility.

Procedure Complete

AFCS Alerts

For more information on AFCS alerts, refer to the Garmin Cockpit Reference Guide.

Abnormal CAS Procedures

ALT AIR OPEN Caution

ALT AIR OPEN

Alternate air door is open.

1. Manifold Pressure ..... CHECK

◆ If environment suspect as cause (icing or visible debris):

a. Flight Conditions ..... CHANGE/EXIT

2. Power ..... REDUCE BELOW 30.5 IN.HG WHEN PRACTICAL

Procedure Complete

• **NOTE** •

Alternate induction door has automatically opened, indicating an obstructed air filter. Potential environmental causes are ice contamination (icing conditions) or particles (visible debris, heavy bugs, smoke or ash).

- If environmental conditions are the suspected cause, exit those conditions as able; engine induction is unfiltered when alternate air door is open.
- Reducing power when able will reduce engine air consumption, and likely close the alternate air door (restoring filter protection to induction air).
- Filters likely require maintenance.

When alternate induction door is open, expect 3-5% power loss due to increased manifold air temperatures and expect lower critical altitude in climb. Percent Power indication will be accurate, reflecting actual (reduced) power.

ALTERNATOR 1 CURRENT Caution

ALTERNATOR 1 CURRENT

Check Alternator 1 current.

1. ALT 1 (D11) Circuit Breaker .....SET
2. ALT 1 Switch ..... CYCLE

◆ If alternator does not reset:

a. ALT 1 Switch.....OFF

b. Non-Essential Loads .....REDUCE

❍ If flight conditions permit, consider shedding the following to preserve Battery 1:

(1) Air Conditioning.....OFF
(2) Cabin Fan .....OFF
(3) Landing Lights (LAND Switch) .....OFF
(4) YAW SERVO (C1) Circuit Breaker..... PULL
(5) ENGINE SERVOS (C2) Circuit Breaker ..... PULL
(6) CONV SYS 1 (D8) Circuit Breaker ..... PULL
(7) CONV SYS 2 (D9) Circuit Breaker ..... PULL
(8) RAD ALT (A14) Circuit Breaker (if installed)..... PULL
(9) EVS CAMERA (C5) Circuit Breaker (if installed) ..... PULL
(10) IRIDIUM DATA (B15) Circuit Breaker (if installed)..... PULL

c. Continue flight, avoiding IMC or night flight as able (reduced power redundancy).

Procedure Complete

• CAUTION •

Dependent on Battery 1 state, landing light may be weak or inoperative for landing.

• NOTE •

Alternator 1 output is low, indicative of alternator failure and will typically be associated with low Main Bus 1 voltage, Battery 1 discharge and MAIN BUS 1 VOLTS Caution message.

ALTERNATOR 2 CURRENT Caution

ALTERNATOR 2 CURRENT

Check Alternator 2 current.

1. ALT 2 (B5) Circuit Breaker..... SET
2. ALT 2 Switch..... CYCLE

◆ If alternator does not reset:

a. ALT 2 Switch .....OFF

b. Continue flight, avoiding IMC or night flight as able (reduced power redundancy).

Procedure Complete

• **NOTE** •

Alternator 2 output is low, indicative of alternator failure. Isolated Alt 2 failure will not typically be associated with any other unusual indications, cautions or warnings (Alt 1 will pick up all loads).

AOA FAIL Advisory

AOA FAIL

Dynamic stall speed band is unavailable.

1. Low speed red band extends to a fixed value of 61 knots.

Procedure Complete

• **NOTE** •

Angle of Attack signal has failed. This signal is used to calculate and display a dynamic stall speed awareness band (red band) on airspeed tape.

Serials w/ IPS: Green donut airspeed reference will be unavailable or unreliable.

AOA HEAT FAIL Caution

AOA HEAT FAIL

Stall warning/AoA heater has failed.

1. STALL VANE HEAT (D3) Circuit Breaker ..... CYCLE

◆ If message persists:

a. Stall Warning System .....EXPECT NO RELIABLE INDICATION

b. Icing Conditions .....AVOID/EXIT

Procedure Complete

• **NOTE** •

Fly aircraft normally using airframe buffet as the stall warning. Ice accumulations on the lift transducer vane may result in unreliable stall warning system operation.

BATTERY 1 CURRENT Caution

BATTERY 1 CURRENT

Check battery 1 current.

1. Main Bus 1, 2 and Non-Essential Bus Loads ..... REDUCE
   a. Air Conditioning ..... OFF
   b. Cabin Fan ..... OFF
   c. Landing Lights (LAND Switch) ..... OFF
   d. YAW SERVO (C1) Circuit Breaker ..... PULL
   e. ENGINE SERVOS (C2) Circuit Breaker ..... PULL
   f. CONV SYS 1 (D8) Circuit Breaker ..... PULL
   g. CONV SYS 2 (D9) Circuit Breaker ..... PULL
   h. RAD ALT (A14) Circuit Breaker (if installed) ..... PULL
   i. EVS CAMERA (C5) Circuit Breaker (if installed) ..... PULL
   j. IRIDIUM DATA (B15) Circuit Breaker (if installed) ..... PULL
2. Main Bus 1, 2 and Essential Voltages ..... MONITOR
3. Land as soon as practicable.

Procedure Complete

• **NOTE** •

Battery 1 discharge while Alt 1 is functioning normally is indicative of an internal power distribution failure within the MCU.

BATTERY 1 FAIL Caution

BATTERY 1 FAIL

Battery 1 service is required.

1. BAT 1 Switch ..... OFF
2. Land as soon as practicable.

Procedure Complete

BATTERY 1 FAULT Caution

BATTERY 1 FAULT

Battery 1 fault is detected.

1. BAT 1 Switch ..... OFF

◆ If message extinguishes:

a. BAT 1 Switch ..... ON

b. Continue flight.

◆ If message persists or reoccurs:

a. BAT 1 switch ..... OFF

b. Exit IMC as soon as practicable.

c. Land as soon as practicable.

2. Contact Cirrus for corrective action.

Procedure Complete

BATTERY 1 LOW Caution

BATTERY 1 LOW

Battery 1 state of charge is low.

◆ If on ground, prior to engine start:

a. External Power ..... CONNECT

Procedure Complete

◆ If on ground with engine running, or in flight:

a. BAT 1 and ALT 1 Switches ..... VERIFY ON

b. Main Bus 1 Voltage ..... CHECK

c. Service aircraft as soon as practicable.

Procedure Complete

• **NOTE** •

Battery 1 may not have sufficient capacity to start the engine.

CHECK OXYGEN Advisory

CHECK OXYGEN

Check oxygen system status.

1. Hypoxia Symptoms ..... CHECK ALL OCCUPANTS

◆ If hypoxia symptoms suspected:

a. Oxygen Mask/Cannula ..... DON

b. Oxygen System (OXY Switch) ..... ON

c. Oxygen Flow Rates ..... CHECK

2. Oxygen Lines ..... VERIFY CONNECTIONS AND ROUTING
3. Oxygen Quantity ..... CHECK

Procedure Complete

CHT Caution

CHT

Cylinder head temperature is high.

◆ If on ground:

a. Power Lever ..... REDUCE

b. Annunciations and Engine Temperatures ..... MONITOR

❍ If message persists:

(1) Power Lever ..... MINIMUM REQUIRED

(2) Do not dispatch.

Procedure Complete

◆ If in flight:

a. Power Lever ..... REDUCE

b. Mixture..... ADJUST TO TOP OF GREEN ARC

c. Airspeed ..... INCREASE

d. Annunciations and Engine Temperatures ..... MONITOR

❍ If message persists:

(1) Power Lever ..... MINIMUM REQUIRED

(2) Engine Instruments ..... MONITOR

❑ If message persists:

(a) Land as soon as practicable.

Procedure Complete

ECS RECIRC ON Advisory

ECS RECIRC ON

ECS recirculation mode is prohibited in flight.

1. Air Conditioner ..... RECIRC DISABLED

Procedure Complete

FLAPS AIRSPEED INHIBIT Caution

FLAPS AIRSPEED INHIBIT

Flaps motion inhibited.

1. Airspeed.....INCREASE OR DECREASE, AS REQUIRED
   OR
2. Flaps .....RETURN TO PREVIOUS POSITION

Procedure Complete

• **NOTE** •

The flaps will extend or retract to the commanded position as soon as FLAPS AIRSPEED INHIBIT caution extinguishes.

FLAPS CLIMB Advisory

FLAPS CLIMB

Flaps not set for enroute climb.

1. Flaps .....UP

Procedure Complete

FLAPS DISAGREE Caution

FLAPS DISAGREE

Flaps not in commanded position.

1. Flaps ..... CYCLE TO ACTUAL FLAP POSITION

◆ If message extinguishes:

a. Flaps ..... SELECT DESIRED FLAP POSITION

b. Continue flight.

Procedure Complete

◆ If message persists:

a. Flaps ..... MONITOR POSITION

b. Perform landing in most favorable flap position achievable.

Procedure Complete

• WARNING •

Flaps motion is inhibited when a flap position disagree condition exists. Setting the flap selector to match actual flap position can potentially extinguish the FLAPS DISAGREE condition and render the flaps operative.

FLAPS FAIL Caution

FLAPS FAIL

Flaps not in commanded position.

1. Flaps ..... CYCLE TO ACTUAL FLAP POSITION

◆ If message persists:

a. Perform landing with flaps at current position.

Procedure Complete

FLAPS SELECTOR FAIL Caution

FLAPS SELECTOR FAIL

Flaps not in commanded position.

1. Perform landing with flaps at current position.

Procedure Complete

FUEL IMBALANCE Advisory

FUEL IMBALANCE

Fuel quantity imbalance has been detected.

1. Fuel Quantity Gauges ..... CHECK
2. Fuel Selector ..... SELECT FULLER TANK

Procedure Complete

• NOTE •

Fuel level imbalance (between left and right) is greater than 8 gallons. Leave the fuel selector cover open until tanks are balanced.

FUEL IMBALANCE Caution

FUEL IMBALANCE

Fuel quantity imbalance has been detected.

1. Fuel Quantity Gauges ..... CHECK
2. Fuel Selector ..... SELECT FULLER TANK

Procedure Complete

• NOTE •

Fuel level imbalance (between left and right) is greater than 10 gallons. Leave the fuel selector cover open until tanks are balanced.

FUEL LOW TOTAL Caution

FUEL LOW TOTAL

Total fuel quantity is low.

1. Fuel Quantity Gauges ..... CHECK
2. Totalized Fuel Quantity ..... CHECK

◆ If totalized value differs significantly from sensed quantity:

a. Initial Fuel Value ..... VERIFY AND CORRECT

◆ If message persists:

a. Land as soon as practicable.

Procedure Complete

• NOTE •

Fuel totalizer or sensed total fuel quantity is less than or equal to 14 gallons.

FUEL PUMP OFF Caution

FUEL PUMP OFF

Fuel pump is turned off.

1. Fuel Pump ..... BOOST OR HIGH BOOST (AS REQ'D)

Procedure Complete

FUEL QTY MISCOMPARE Caution

FUEL QTY MISCOMPARE

Sensed and totalized fuel quantity disagreement.

1. Fuel Quantity/Fuel Remaining ..... COMPARE

◆If totalized fuel quantity differs significantly from sensed quantity:

a. Initial Fuel Value ..... VERIFY AND CORRECT

Procedure Complete

FUEL VALVE AUTO FAIL Caution

FUEL VALVE AUTO FAIL

Automatic fuel tank selection is unavailable.

1. FUEL VALVE Circuit Breaker (C3) ..... PULL
2. Fuel Selector ..... LEFT OR RIGHT (AS REQ'D)

Procedure Complete

• **NOTE** •

Leave the fuel selector cover open and operate the tank selector manually for duration of flight.

FUEL VALVE OFF Advisory

FUEL VALVE OFF

Fuel valve is in the off position.

1. Fuel Selector ..... LEFT OR RIGHT (AS REQ'D)

Procedure Complete

IPS FLUID LOW Advisory

IPS FLUID LOW

IPS fluid quantity is low.

1. Icing Conditions ..... AVOID/EXIT

Procedure Complete

• **NOTE** •

Fluid is less than or equal to 1 gallon.

IPS FLUID LOW Caution

IPS FLUID LOW

IPS fluid quantity is low.

1. Icing Conditions ..... AVOID/EXIT

Procedure Complete

• **NOTE** •

Fluid is less than or equal to 1 gallon.

Depending on the selected flow rate, IPS FLUID LOW annunciation may occur at lower fluid quantities.

IPS IMBALANCE Caution

IPS IMBALANCE

IPS fluid quantity imbalance has been detected.

1. Revert to AUTO control of the fluid source to control the fluid quantity.

◆If IPS PRESSURE LOW Caution annunciates:

a. Revert to manual control of the fluid source to control the fluid level quantity.

(1) Fluid Quantity ..... SWITCH TO FULLER TANK

b. W/S Push-Button..... PRESS

(1) Repeat operation of windshield pump to verify metering pumps are primed properly as evidenced by deicing fluid exiting windshield nozzles.

◆If message persists or is intermittent:

a. Fluid Quantity..... SWITCH TO OPPOSITE TANK

b. W/S Push-Button..... PRESS

(1) Repeat operation of windshield pump to verify metering pumps are primed properly as evidenced by deicing fluid exiting windshield nozzles.

c. Icing Conditions ..... AVOID/EXIT

Procedure Complete

• **NOTE** •

Imbalance between left and right sensed fluid quantity is greater than 1.0 gallon.

IPS PRESSURE HIGH Caution

IPS PRESSURE HIGH

IPS pressure is high.

1. Evidence of IPS Flow .....MONITOR/VERIFY
2. Icing Conditions..... AVOID/EXIT

Procedure Complete

• NOTE •

Typically indicates a clogged filter.

IPS PRESSURE LOW Caution

IPS PRESSURE LOW

IPS pressure is low.

1. ICE PROTECT 1 (A4) and 2 (B4) Circuit Breakers..... SET
2. Fluid Quantity..... SWITCH TO FULLER TANK
3. W/S Push-Button .....PRESS
   a. Repeat operation of windshield pump to verify metering pumps are primed properly as evidenced by deicing fluid exiting windshield nozzles.
4. ICE PROTECT Mode Switch ..... HIGH

   ◆If message persists or is intermittent:

   a. BKUP Switch ..... ON
   b. W/S Push-Button.....PRESS

Procedure Complete

• CAUTION •

A persistent IPS PRESSURE LOW Caution indicates an abnormal condition in the tail section of IPS and warrants increased caution because the tail section's smaller leading edge radius will typically collect ice more quickly and ice accretion is more difficult to monitor.

IPS PUMP BACKUP Advisory

IPS PUMP BACKUP

IPS backup pump mode has been selected.

1. Verify use of IPS backup pump is appropriate.

Procedure Complete

IPS QUANTITY FAIL Caution

IPS QUANTITY FAIL

Left or right IPS fluid quantities are unreliable.

1. Revert to manual control of the fluid source to control the fluid level quantity.

Procedure Complete

IPS SPEED HIGH Caution

IPS SPEED HIGH

Airspeed is too high for ice protection.

1. Airspeed ..... MAINTAIN 95-177 KIAS AND less than 204 KTAS

Procedure Complete

• **NOTE** •

Airspeed is greater than 177 KIAS or 204 KTAS.

IPS SPEED LOW Caution

IPS SPEED LOW

Airspeed is too low for ice protection.

1. Airspeed ..... MAINTAIN 95-177 KIAS AND less than 204 KTAS

Procedure Complete

• **NOTE** •

Airspeed is less than 95 KIAS.

IPS TEMP LOW Caution

IPS TEMP LOW

Temperature is too low for ice protection.

1. ICE PROTECT System Switch ..... OFF
2. Icing Conditions ..... AVOID/EXIT

Procedure Complete

• **NOTE** •

Minimum Operating Temperature for IPS is -30 °F (-34 °C).

MAIN BUS 1 VOLTS Caution

MAIN BUS 1 VOLTS

Check voltage on Main Bus 1.

1. ALT 1 (D11) Circuit Breaker .....SET
2. ALT 1 Switch ..... CYCLE

◆ If alternator does not reset:

a. ALT 1 Switch.....OFF

b. Non-Essential Loads .....REDUCE

❍ If flight conditions permit, consider shedding the following to preserve Battery 1:

(1) Air Conditioning.....OFF
(2) Cabin Fan .....OFF
(3) Landing Lights (LAND Switch) .....OFF
(4) YAW SERVO (C1) Circuit Breaker..... PULL
(5) ENGINE SERVOS (C2) Circuit Breaker ..... PULL
(6) CONV SYS 1 (D8) Circuit Breaker ..... PULL
(7) CONV SYS 2 (D9) Circuit Breaker ..... PULL
(8) RAD ALT (A14) Circuit Breaker (if installed)..... PULL
(9) EVS CAMERA (C5) Circuit Breaker (if installed) ..... PULL
(10) IRIDIUM DATA (B15) Circuit Breaker (if installed)..... PULL

c. Continue flight, avoiding IMC or night flight as able (reduced power redundancy).

Procedure Complete

• CAUTION •

Dependent on Battery 1 state, landing light may be weak or inoperative for landing.

• NOTE •

Main Bus 1 Voltage is low, indicates Alt 1 failure and will typically be associated with low Main Bus 1 voltage and Alt 1 current indications, Battery 1 discharge and ALTERNATOR 1 CURRENT Caution message.

MAIN BUS 2 VOLTS Caution

MAIN BUS 2 VOLTS

Check voltage on Main Bus 2.

1. ALT 2 (B5) Circuit Breaker..... SET
2. ALT 2 Switch..... CYCLE

◆ If alternator does not reset:

a. ALT 2 Switch .....OFF

b. Continue Flight, avoiding IMC or night flight as able (reduced power redundancy).

Procedure Complete

• **NOTE** •

Main Bus 2 Voltage is low, indicative of dual Alt 1 and 2 failures and will typically be associated with low Main Bus 1 and Main Bus 2 voltages, Alt 1 and Alt 2 current indications, Battery 1 discharge, ALT 1 & 2 and MAIN BUS 1 VOLTS Caution and MAIN BUS 2 VOLTS Caution messages, and ESSENTIAL BUS VOLTS Warning message.

MANIFOLD PRESSURE Caution

MANIFOLD PRESSURE

Check manifold pressure.

1. Power Lever .....REDUCE TO LESS THAN 36.5"

◆ If noticeable surging is present:

a. Land as soon as practicable.

Procedure Complete

• **NOTE** •

Manifold Pressure has exceeded caution limits. High Manifold Pressure may be a result of cold oil and the affect of high associated oil pressure on the wastegate controller. Maintain power at or below 36.5" by power lever management. If High Manifold Pressure persists when oil temperatures are greater than 150 °F, MAP controller requires a maintenance adjustment. If engine surges are associated, MAP may be exceeding pressure relief valve (pop-off valve) threshold. Relief valve will protect induction manifolds from excessive pressure, but it may be a sign of a failed closed wastegate; if this is observed or suspected, complete the Overboost / Pressure Relief Valve Emergency Checklist.

MIXTURE POSITION Caution

MIXTURE POSITION

Check mixture lever position.

1. Mixture ..... AS REQUIRED

◆ If message reoccurs or mixture lever is difficult to move:

a. ENGINE SERVOS (C2) Circuit Breaker ..... PULL

Procedure Complete

• **NOTE** •

Mixture setting is too low.

OIL PRESSURE Caution

OIL PRESSURE

Oil pressure is out of range.

◆ If in flight:

a. Land as soon as practicable.

Procedure Complete

• **NOTE** •

Oil pressure between 10 psi and 30 psi at or above 1000 RPM.

OIL TEMP Caution

OIL TEMP

Oil temperature is high.

1. Power .....REDUCE AS MUCH AS PRACTICAL
2. Airspeed ..... INCREASE
3. Mixture ..... ADJUST TO TOP OF GREEN ARC
4. Oil Temperature Gauge ..... MONITOR

Procedure Complete

• **NOTE** •

Oil temperature is greater than 240°F (115 °C).

OXYGEN ON Advisory

OXYGEN ON

Oxygen system is left on after shutdown.

1. Oxygen System (OXY Switch) .....OFF

Procedure Complete

• **NOTE** •

Annunciation indicates that oxygen system has been left ON after on-ground engine shutdown. If system is left ON and aircraft power is turned OFF, the solenoid valve will remain open and may result in unexpected leakage and pressure loss.

OXYGEN QTY LOW Advisory

OXYGEN QTY LOW

Oxygen quantity is low.

◆ If on ground:

a. Oxygen Supply ..... REPLENISH (AS REQ'D)

Procedure Complete

◆ If in flight:

a. If use of oxygen is anticipated, verify adequate oxygen supply for flight duration. Refer to Duration chart in Oxygen System AFMS.

Procedure Complete

• **NOTE** •

Annunciation indicates oxygen tank pressure is less than or equal to 800 PSI at pressure altitudes less than 10,000 ft.

OXYGEN QTY LOW Caution

OXYGEN QTY LOW

Oxygen quantity is low.

1. Oxygen Pressure and Flow Rate ..... CHECK
2. Oxygen Duration ..... CALCULATE
   See Oxygen AFMS; calculate duration based on remaining pressure, number of occupants and type of device (mask or cannula).
3. Perform Normal Descent as necessary, dependent on duration calculation.

Procedure Complete

• **NOTE** •

Annunciation indicates tank pressure is between 800 and 400 PSI at pressure altitudes greater than or equal to 10,000 ft, see Oxygen AFMS to determine remaining duration.

OXYGEN REQUIRED Caution

OXYGEN REQUIRED

Oxygen usage is required.

1. Oxygen System (OXY Switch) ..... ON
2. Oxygen Masks or Cannulas ..... DON
3. Oxygen Flow Rate ..... SET AND MONITOR

Procedure Complete

• **NOTE** •

Annunciation indicates the aircraft is above 12,500 ft pressure altitude for greater than 30 minutes and the oxygen system is not ON, or the aircraft is above 14,000 ft pressure altitude and oxygen system is not ON.

PARK BRAKE Caution

PARK BRAKE

Parking brake is set.

1. Parking Brake.....RELEASE

Procedure Complete

PITOT HEAT FAIL Caution

PITOT HEAT FAIL

Pitot heat failure.

1. Probe Heat Switch (if installed) .....CYCLE OFF, ON
   ◆ If message persists:
   a. Airspeed ..... EXPECT NO RELIABLE INDICATION
   b. Icing Conditions ..... AVOID/EXIT

Procedure Complete

• **NOTE** •

Pitot heat failure. Displayed when Probe Heat Switch is ON and pitot heat current is not detected.

If using Autopilot, monitor for degraded performance and be aware of possible erroneous overspeed/underspeed protection.

PROBE HEAT OFF Caution

PROBE HEAT OFF

Probe heat is required.

1. Probe Heat Switch (if installed) ..... CYCLE

   ◆ If message persists:

   a. Airspeed .....EXPECT NO RELIABLE INDICATION
   b. Stall Warning System .....EXPECT NO RELIABLE INDICATION
   c. Icing Conditions .....AVOID/EXIT

Procedure Complete

• **NOTE** •

Displayed 15 seconds after system detects OAT is less than or equal to 41 °F (5 °C) and Probe Heat is OFF.

SFD ALT MISCOMPARE Caution

SFD ALT MISCOMPARE

SFD altitude miscompare.

1. DISPLAY BACKUP Button.....PRESS
2. Altitude.....CROSS-CHECK SFD WITH PFD
3. Altitude.....CROSS-CHECK PFD ADC 1 WITH ADC 2

• **NOTE** •

Select PFW mode on GTC 1 or GTC 2 and select SENSORS menu or via PFD softkeys to select PFD air data source.

4. Select correct sensor source, if required.
5. Pull erroneous circuit breakers, if required.
   - ADAHRS 1 (B13)
   - ADAHRS 2 (C13)
   - STNDBY ATT A (B14)
   - STNDBY ATT B (C14)
6. Exit IMC as soon as practical.
7. Land as soon as practicable.

Procedure Complete

SFD IAS MISCOMPARE Caution

SFD IAS MISCOMPARE

SFD airspeed miscompare.

1. DISPLAY BACKUP Button ..... PRESS
2. Airspeed ..... CROSS-CHECK SFD WITH PFD
3. Airspeed ..... CROSS-CHECK PFD ADC 1 WITH ADC 2

• **NOTE** •

Select PFW mode on GTC 1 or GTC 2 and select SENSORS menu or PFD softkeys to select PFD air data source.

4. Select correct sensor source, if required.
5. Pull erroneous circuit breakers, if required.
   - ADAHRS 1 (B13)
   - ADAHRS 2 (C13)
   - STNDBY ATT A (B14)
   - STNDBY ATT B (C14)
6. Exit IMC as soon as practical.
7. Land as soon as practicable.

Procedure Complete

SFD NO-COMPARE Advisory

SFD NO-COMPARE

SFD comparison data missing.

1. Exit IMC.
2. Land as soon as practicable.

Procedure Complete

SFD PITCH MISCOMPARE Caution

SFD PITCH MISCOMPARE

SFD pitch miscompare.

1. DISPLAY BACKUP Button.....PRESS
2. Attitude.....CROSS-CHECK SFD WITH PFD
3. Attitude.....CROSS-CHECK PFD AHRS 1 WITH AHRS 2

• **NOTE** •

Select PFW mode on GTC 1 or GTC 2 and select SENSORS menu or PFD softkeys to select PFD attitude source.

4. Select correct sensor source, if required.
5. Pull erroneous circuit breakers, if required.
   - ADAHRS 1 (B13)
   - ADAHRS 2 (C13)
   - STNDBY ATT A (B14)
   - STNDBY ATT B (C14)
6. Exit IMC as soon as practical.
7. Land as soon as practicable.

Procedure Complete

SFD ROLL MISCOMPARE Caution

SFD ROLL MISCOMPARE

SFD roll miscompare.

1. DISPLAY BACKUP Button ..... PRESS
2. Attitude ..... CROSS-CHECK SFD WITH PFD
3. Attitude ..... CROSS-CHECK PFD AHRS 1 WITH AHRS 2

• NOTE •

Select PFW mode on GTC 1 or GTC 2 and select SENSORS menu or PFD softkeys to select PFD attitude source.

4. Select correct sensor source, if required.
5. Pull erroneous circuit breakers, if required.
   - ADAHRS 1 (B13)
   - ADAHRS 2 (C13)
   - STNDBY ATT A (B14)
   - STNDBY ATT B (C14)
6. Exit IMC as soon as practical.
7. Land as soon as practicable.

Procedure Complete

STARTER ENGAGED Caution

STARTER ENGAGED

Starter is engaged.

◆ If on ground:

a. Starter Button ..... RELEASE

❍ If starter does not disengage (stuck button, relay, or solenoid failure):

(1) Wait 20 seconds before next start attempt.
(2) BAT 1 Switch ..... OFF
(3) Mixture ..... CUTOFF
(4) Fuel Pump ..... OFF
(5) STARTER (D1) Circuit Breaker ..... PULL

Procedure Complete

◆ If in flight:

a. STARTER (D1) Circuit Breaker ..... PULL
b. Flight ..... CONTINUE

Procedure Complete

• WARNING •

Use caution after shutdown if STARTER circuit breaker required pull (failed relay or solenoid). If breaker is unknowingly or unintentionally reset, starter will instantly engage if Battery 1 power is supplied; creating a hazard for ground personnel.

• NOTE •

Starter has been engaged for more than 15 seconds (starter limit is 10 seconds); if not manually engaged, such as during difficult start, this annunciation may indicate a failure of the starter solenoid or a stuck starter button.

TAKEOFF FLAPS Caution

TAKEOFF FLAPS

Flaps not in takeoff configuration.

1. Takeoff.....ABORT
2. Flaps 50%

Procedure Complete

Other System Messages

MFD FAN FAIL Advisory

MFD FAN FAIL

MFD cooling fan failure.

1. AVIONICS FAN 1 (D7) Circuit Breaker .....SET

◆ If annunciation does not extinguish:

a. High cabin temps..... LAND AS SOON AS PRACTICABLE
b. Low cabin temps .....CONTINUE, MONITOR

Procedure Complete

PFD FAN FAIL Advisory

PFD FAN FAIL

PFD cooling fan failure.

1. AVIONICS FAN 2 (C7) Circuit Breaker.....SET

◆ If annunciation does not extinguish:

a. High cabin temps..... LAND AS SOON AS PRACTICABLE
b. Low cabin temps .....CONTINUE, MONITOR

Procedure Complete

Intentionally Left Blank

Section 4: Normal Procedures

Table of Contents

Introduction 3
Airspeeds for Normal Operation 3
Normal Procedures 4
  Preflight Inspection 4
  Before Engine Start 11
  Engine Start 12
  Before Taxi 14
  Before Takeoff 15
  Maximum Power Fuel Flow 18
  Takeoff 18
  Normal Takeoff 19
  Short Field Takeoff 19
  Full Power Climb: Rich of Peak Technique 20
  Cruise Climb: Lean of Peak Technique 22
  Cruise 23
  Descent 24
  Before Landing 25
  Landing 25
    Normal Landing 25
    Short Field Landing 26
    Crosswind Landing 26
  Balked Landing/Go-Around 27
  After Landing 27
  Shutdown 28
Stalls 29
Environmental Conditions 30
  Cold Weather Operation 30
    Starting 30
  Hot Weather Operation 32
    Ground Operation of Air Conditioning System (Optional) 32
  Extended Ground Operation 32
Noise Characteristics/Abatement 33
Serials w/ IPS: Icing Conditions 34
  Maximum Operating Time 35
  Preflight Inspection 36
  Ice Formation Determination 38

Before Takeoff 38
After Takeoff: 38
In Flight 39
If Inadvertent Icing Encounter or Icing Conditions Exist 39
While in Icing Conditions 39
After Leaving Icing Conditions 40
Cruise 40
Approach and Landing 41
If Icing Conditions Exist: 41
After Landing and Shutdown 41

Introduction

This section provides amplified procedures for normal operation of the Cirrus SR22T aircraft.

• **NOTE** •

Refer to Section 9: Log of Supplements for optional equipment Normal Procedures.

Normal operating procedures for Garmin TAWS and GFC 700 Automatic Flight Control System are described in the Cirrus Perspective Touch+ Pilot's Guide.

Airspeeds for Normal Operation

Unless otherwise noted, the following speeds are based on a maximum weight of 3600 lb and may be used for any lesser weight. However, to achieve the performance specified in Section 5 for takeoff and landing distance, the speed appropriate to the particular weight must be used.

Takeoff:

- Normal, Flaps 50% ..... 77 KIAS
- Obstacle Clearance, Flaps 50% ..... 85 KIAS

Enroute Climb, Flaps Up:

- Normal ..... 120 KIAS
- Best Rate of Climb, SL ..... 103 KIAS
- Best Rate of Climb, 10,000' ..... 102 KIAS
- Best Angle of Climb, SL ..... 88 KIAS
- Best Angle of Climb, 10,000' ..... 88 KIAS

Landing Approach:

- Normal Approach, Flaps Up ..... 90 - 95 KIAS
- Normal Approach, Flaps 50% ..... 85 - 90 KIAS
- Normal Approach, Flaps 100% ..... 80 - 85 KIAS
- Short Field, Flaps 100% (V_{REF}) ..... 79 KIAS

Go-Around, Flaps 50%:

- Best Angle of Climb, SL ..... 80 KIAS

Maximum Recommended Turbulent Air Penetration:

- 3600 Lb ..... 140 KIAS
- 2900 Lb ..... 123 KIAS

Maximum Demonstrated Crosswind Velocity:

- Takeoff or Landing ..... 21 Knots

Normal Procedures

Preflight Inspection

• WARNING •

Before carrying out preflight inspections, ensure that all required maintenance has been accomplished. Review your flight plan and compute weight and balance and performance requirements. Throughout the walk-around: check all hinges, hinge pins, and bolts for security; check skin for damage, condition, and evidence of delamination; check all control surfaces for proper movement and excessive free play; check area around liquid reservoirs and lines for evidence of leaking.

In cold weather, remove all frost (polished or not), ice, snow, or slush from fuselage, wing, stabilizers, and control surfaces. Ensure that control surfaces are free of internal ice or debris. Check that wheel fairings are free of snow and ice accumulation.

Failure to comply may result in significant aircraft damage, loss of aircraft, and/or loss of life.

• CAUTION •

For serials without a probe heat switch: probe heat will be automatically activated for 10 seconds when BAT 1 is turned on. Repeated cycling of the BAT 1 switch will result in the pitot probe and stall vane becoming very hot.

• NOTE •

Serials w/ IPS: If icing conditions are expected or possible during flight, perform additional procedures outlined in Icing Conditions.

Figure 4-1: Recommended Walk-Around Sequence

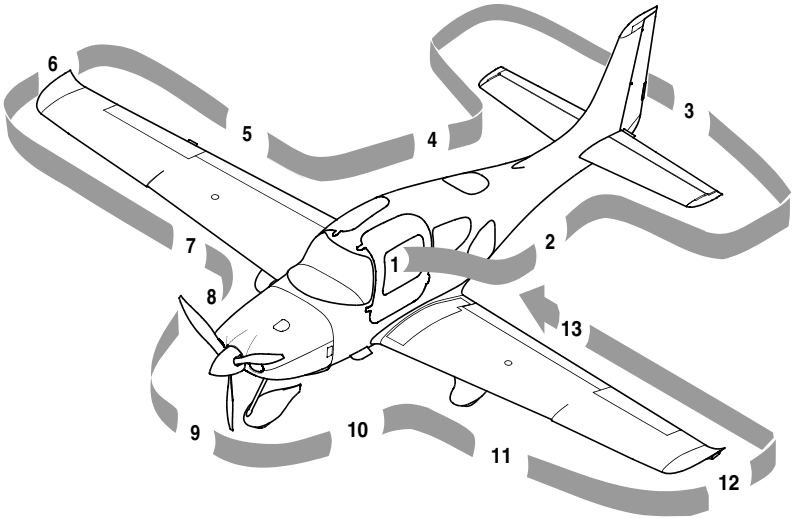

SR22_FM04_5332

1. Cabin
   a. Required Documents ..... CHECK
   b. BAT 2 Switch..... ON
      (1) Verify PFD, GTC 1, and GTC 2 power on.
      (2) Verify MFD does not power on.
   c. Essential Bus Voltage ..... 23-25 VOLTS
   d. BAT 1 Switch..... ON
      (1) Verify MFD powers on.
   e. Avionics Cooling Fan..... AUDIBLE
   f. Fuel Quantity ..... CHECK
   g. Oxygen Masks/Cannulas and Hoses (if available)..... CHECK CONDITION

(Continued on next page)

(Continued)

h. Oxygen System (OXY Switch) (if available and required) ..... ON
   (1) Quantity .. VERIFY ADEQUATE SUPPLY FOR FLIGHT WITH RESERVE
   (2) Flow ..... CHECK FLOWMETER ON ALL DELIVERY DEVICES
   (3) Oxygen System (OXY Switch) ..... OFF
i. Flaps 100%
j. Lights ..... CHECK OPERATION
k. Serials w/o IPS: Stall Warning System Inlet ..... UNOBSTRUCTED

• WARNING •
Lift Transducer Faceplate and Vane may be HOT.

l. Stall Warning Audio Alert ..... TEST
   (1) Serials w/o IPS: Apply suction to the stall warning system inlet.
   (2) Serials w/ IPS: Raise Lift Transducer stall vane.
m. BAT 1 and BAT 2 Switches ..... OFF
n. Alternate Static Source ..... NORMAL
o. Circuit Breakers ..... SET
p. Fire Extinguisher ..... CHARGED AND STOWED
q. Emergency Egress Hammer ..... STOWED
r. STARTER DISABLE Switch ..... ENABLE

2. Left Fuselage
   a. Antennae ..... CONDITION AND ATTACHMENT
   b. Wing/Fuselage Fairing ..... CHECK
   c. Baggage Door ..... CLOSED AND SECURE
   d. Static Port ..... CONDITION, CLEAR
   e. Parachute Cover ..... SEALED AND SECURE

(Continued on next page)

(Continued)

3. Empennage
   a. Tiedown Rope ..... REMOVE
   b. Horizontal and Vertical Stabilizers ..... CONDITION

• NOTE •

Verify tape covering the forward and aft inspection holes located on outboard ends of horizontal stabilizer is installed and securely attached.

   c. Elevator ..... CONDITION, MOTION
   d. Elevator Trim Tab ..... CONDITION AND SECURITY
   e. Elevator Static Wicks ..... CONDITION AND SECURITY
   f. Rudder ..... CONDITION, MOTION
   g. Rudder Trim Tab ..... CONDITION AND SECURITY
   h. Rudder Static Wicks ..... CONDITION AND SECURITY
   i. Attachment hinges, bolts, and cotter pins ..... SECURE
4. Right Fuselage
   a. Static Port ..... CONDITION, CLEAR
   b. Wing/Fuselage Fairings ..... CHECK
5. Right Wing Trailing Edge
   a. Flap and Rub Strips ..... CONDITION AND SECURITY
   b. Aileron ..... CONDITION, MOTION
   c. Aileron Trim Tab ..... CONDITION AND SECURITY
   d. Aileron Static Wicks ..... CONDITION AND SECURITY
   e. Aileron Gap Seal ..... CONDITION AND SECURITY

• NOTE •

Verify bolt located under the inboard edge of aileron is secured with safety wire.

   f. Hinges, actuation arm, bolts, and cotter pins ..... SECURE

(Continued on next page)

(Continued)

6. Right Wing Tip
   a. Tip ..... ATTACHMENT
   b. Wing Tip Light and Lens .....CONDITION AND SECURITY
   c. Wing Tip Static Wicks .....CONDITION AND SECURITY
   d. Fuel Vent (underside) ..... CLEAR

7. Right Forward Wing and Main Gear
   a. Leading Edge and Stall Strips .....CONDITION
   b. Fuel Cap ..... CHECK FUEL LEVEL AND SECURE
   c. Fuel Drains (2 underside) ..... SAMPLE
   d. Wheel Fairings.....SECURITY, ACCUMULATION OF DEBRIS
   e. Tire .....CONDITION
   f. Wheel and Brakes ..... FLUID LEAKS, EVIDENCE OF OVERHEATING, GENERAL CONDITION, AND SECURITY
   g. Chocks and Tiedown Ropes .....REMOVE
8. Nose, Right Side
   a. Vortex Generator .....CONDITION
   b. Ice Inspection Light .....CONDITION AND SECURITY
   c. Cowling ..... ATTACHMENTS SECURE
   d. Exhaust Pipe ..... CONDITION, SECURITY, AND CLEARANCE
9. Nose Gear, Propeller, and Spinner

• WARNING •

Keep clear of propeller rotation plane. Do not allow others to approach propeller.

   a. Tow Bar .....REMOVE AND STOW
   b. Landing Light .....CONDITION
   c. Strut.....CONDITION
   d. Wheel Faring .....SECURITY, ACCUMULATION OF DEBRIS
   e. Wheel and Tire .....CONDITION
   f. Propeller .....CONDITION (INDENTATIONS, NICKS, ETC.)
   g. Spinner .....CONDITION, SECURITY, AND OIL LEAKS

(Continued on next page)

(Continued)

h. Air Inlets ..... CLEAR

i. Alternator ..... CONDITION

10. Nose, Left Side

• CAUTION •

The engine should not be operated with less than six quarts of oil. Seven quarts (dipstick indication) is recommended for extended flights.

a. Engine Oil ..... CHECK 6-8 QUARTS, LEAKS, CAP AND DOOR SECURE

b. Ice Inspection Light ..... CONDITION AND SECURITY

c. Cowling ..... ATTACHMENTS SECURE

d. External Power ..... DOOR SECURE

e. Gascolator (underside) ..... DRAIN FOR 3 SECONDS, SAMPLE

f. Vortex Generator ..... CONDITION

g. Exhaust Pipe ..... CONDITION, SECURITY, AND CLEARANCE

11. Left Main Gear and Forward Wing

a. Wheel Fairings ..... SECURITY, ACCUMULATION OF DEBRIS

b. Tire ..... CONDITION

c. Wheel and Brakes ..... FLUID LEAKS, EVIDENCE OF OVERHEATING, GENERAL CONDITION, AND SECURITY

d. Chocks and Tiedown Ropes ..... REMOVE

e. Fuel Drains (2 underside) ..... SAMPLE

f. Fuel Cap ..... CHECK FUEL LEVEL AND SECURE

g. Leading Edge and Stall Strips ..... CONDITION

12. Left Wing Tip

a. Fuel Vent (underside) ..... CLEAR

b. Pitot Probe ..... CLEAR

c. Wing Tip Light and Lens ..... CONDITION AND SECURITY

d. Tip ..... ATTACHMENT

e. Wing Tip Static Wicks ..... CONDITION AND SECURITY

(Continued on next page)

(Continued)

13. Left Wing Trailing Edge

• **NOTE** •

Verify bolt located under the inboard edge of aileron is secured with safety wire.

a. Hinges, actuation arm, bolts, and cotter pins .....SECURE
b. Aileron Gap Seal .....CONDITION AND SECURITY
c. Aileron Static Wicks .....CONDITION AND SECURITY
d. Aileron .....CONDITION, MOTION
e. Flap and Rub Strips.....CONDITION AND SECURITY

Before Engine Start

1. Preflight Inspection ..... COMPLETE
2. Passengers .....BRIEFED

• NOTE •

Ensure all the passengers have been fully briefed on smoking, the use of the oxygen system, seat belts, doors, emergency exits, egress hammer, Safe Return Autoland, and CAPS.

3. Seats and Seat Belts .....ADJUST AND SECURE

• WARNING •

Crew seats must be locked in position and control handles fully down before flight. Ensure seat belt harnesses are not twisted.

4. Parking Brake ..... AS REQUIRED
5. BAT 1 and BAT 2 Switches ..... ON
6. External Power (If required) ..... CONNECT

Engine Start

If the engine is warm, no priming is required. For the first start of the day and in cold conditions, prime will be necessary.
Weak intermittent firing followed by puffs of black smoke from the exhaust indicates over-priming or flooding. Excess fuel can be cleared from the combustion chambers by the following procedure:

- Turn fuel pump off.
- Allow fuel to drain from intake tubes.
- Set the mixture control full lean and the power lever full open.
- Crank the engine through several revolutions with the starter.
- When engine starts, release starter, retard power lever, and slowly advance the mixture control to FULL RICH position.

If the engine is under-primed, especially with a cold soaked engine, it will not fire, and additional priming will be necessary. As soon as the cylinders begin to fire, open the power lever slightly to keep it running. Refer to Cold Weather Operation in this section or additional information regarding cold weather operations.

• WARNING •

If airplane will be started using external power, keep all personnel and power unit cables well clear of the propeller rotation plane.

(Continued on next page)

(Continued)

1. ALT 1 and ALT 2 Switches ..... OFF
2. CAS Messages ..... CHECK
3. Strobe Lights (STRB Switch) ..... ON
4. Mixture ..... FULL RICH
5. Power Lever ..... FULL FORWARD
6. Fuel Pump ..... BOOST

• NOTE •

On first start of the day, especially under cool ambient conditions, holding Fuel Pump switch to HIGH BOOST/PRIME for 2 seconds will improve starting.

7. Propeller Area ..... CLEAR
8. Brakes ..... HOLD
9. Power Lever ..... OPEN ¼ INCH
10. Engine Knob ..... BOTH
11. Starter ..... ENGAGE

• CAUTION •

Limit cranking to intervals of 10 seconds with a 20-second cooling period between cranks. This will improve battery and contactor life.

12. Power Lever ..... RETARD (MAINTAIN 1000 RPM)
13. Oil Pressure ..... RISES WITHIN 30 SECONDS OF START

• NOTE •

In cold weather, oil pressure may be slow to rise; shut down if no indication within 60 seconds after start.

14. Mixture ..... LEAN UNTIL RPM RISES TO A MAXIMUM VALUE

• NOTE •

Leave the mixture at maximum RPM value during taxi and until run-up.

15. ALT 1 and ALT 2 Switches ..... ON
16. Engine Parameters ..... MONITOR
17. Avionics Initialization ..... ALL INITS COMPLETE
18. CAPS Pin ..... REMOVE AND STOW
19. External Power (If required.) ..... DISCONNECT

Before Taxi

When taxiing, directional control is accomplished with rudder deflection and intermittent braking (toe taps) as necessary. Proper braking practices are critical to avoid potential damage to the brakes. Pilots unaccustomed to free castering nose wheel steering may be inclined to “ride” the brakes to maintain constant taxi speeds and use the brakes excessively for steering. Use only as much power as is necessary to achieve forward movement. Deceleration or taxi speed control using brakes but without a reduction in power will result in increased brake temperature. Taxi over loose gravel at low engine speed to avoid damage to the propeller tips.

1. Flaps ..... UP
2. COM and NAV/GPS ..... SET
3. ATIS/Clearance ..... OBTAIN
4. Altimeter ..... SET
5. Transponder ..... SET
6. Heading/Initial ALT ..... SET
7. Flight Controls ..... FREE AND CORRECT
8. Lights ..... AS REQUIRED
9. Cabin Heat/Defrost ..... AS REQUIRED
10. Fuel Selector ..... SWITCH TANK
11. Autopilot ..... ENGAGE (PRESS AP BUTTON)
12. AP DISC Button ..... PRESS
13. Trim ..... SET
14. Parking Brake ..... RELEASE
15. Brakes ..... CHECK

Before Takeoff

During cold weather operations, the engine should be properly warmed up before takeoff. In most cases this is accomplished when the oil temperature has reached at least 100 °F (38 °C). In warm or hot weather, precautions should be taken to avoid overheating during prolonged ground engine operation. Additionally, long periods of idling may cause fouled spark plugs.

• WARNING •

Do not takeoff with frost, ice, snow, or other contamination on the fuselage, wing, stabilizers, and control surfaces.

Allow a cooling period following a high-energy braking event. High-energy braking can include an aborted takeoff or the equivalent energy required for a Maximum Gross Weight full-stop from 70 knots in less than 1000 feet.

• CAUTION •

Because this aircraft has a turbocharged system that maintains 36.0 in.Hg manifold pressure for all takeoffs, the mixture should be full rich for takeoff, even at high elevation airports. Leaning for takeoff and during maximum performance climb may cause excessive cylinder head temperatures.

• NOTE •

If IPS installed and icing conditions are anticipated immediately after takeoff, perform additional procedures in Serials w/ IPS: Icing Conditions.

(Continued on next page)

(Continued)

1. Doors ..... LATCHED
2. Center Console Switch Panel ..... SET
3. Air Conditioner ..... RECIRC DISABLED

• **NOTE** •

If Air Conditioner is ON for takeoff roll, see Section 5, Takeoff Distance for takeoff distance adjustment. No takeoff distance adjustment is necessary if system remains OFF for takeoff. Airflow Selector should not be set to OFF, unless otherwise specified by a procedure.

4. Fuel Quantity ..... CONFIRM
5. Fuel Selector ..... FULLER TANK, CLOSE COVER FOR AUTOMATIC OPERATION
6. Fuel Pump ..... BOOST
7. Mixture ..... FULL RICH
8. Flaps ..... SET 50% AND CHECK
9. Brakes ..... HOLD
10. Power Lever ..... 1700 RPM
11. Alternator ..... CHECK
    a. Probe Heat Switch (if installed) ..... ON
    b. Landing Lights (LAND Switch) ..... ON
12. Voltage ..... CHECK
13. Probe Heat Switch (if installed) ..... AS REQUIRED

• **NOTE** •

Probe Heat should be turned ON for flight into IMC, flight into visible moisture, or whenever ambient temperatures are 41 °F (5 °C) or less.

14. Landing Lights (LAND Switch) ..... AS REQUIRED
15. Magnetos ..... CHECK LEFT AND RIGHT
    a. Engine Knob ..... R, NOTE RPM, THEN BOTH
    b. Engine Knob ..... L, NOTE RPM, THEN BOTH

(Continued on next page)

(Continued)

• **NOTE** •

RPM drop must not exceed 150 RPM for either magneto. RPM differential must not exceed 50 RPM between magnetos. If there is a doubt concerning operation of the ignition system, RPM checks at higher engine speeds will usually confirm whether a deficiency exists.

An absence of RPM drop may indicate faulty grounding of one side of the ignition system or magneto timing set in advance of the specified setting.

16. Engine Parameters ..... CHECK
17. Power Lever ..... IDLE

• **NOTE** •

Verify smooth engine operation at idle speed of 600 to 750 RPM.

18. Power Lever ..... 1000 RPM
19. Trim ..... SET TAKEOFF
20. CAS Messages ..... CHECK

Maximum Power Fuel Flow

For maximum power operations (Power Lever full forward - 2500 RPM, 35.5-36.5 in.Hg manifold pressure) fuel flow should be in the green arc.

For any power setting greater than 30.5 in.Hg (cruise power) fuel flow is indicated by a dynamically calculated green arc displayed on the fuel gage. Fuel flow should always be maintained within this arc by use of the mixture lever.

Takeoff

Power Check: Check full-throttle engine operation early in takeoff run. The engine should run smoothly and turn approximately 2500 RPM. Verify all engine parameters are not in caution or warning ranges. Discontinue takeoff at any sign of rough operation or sluggish acceleration. Make a thorough full-throttle static run-up before attempting another takeoff.

Manifold pressure may temporarily increase to 36.5 - 37.5 in.Hg on first flight of the day due to cooler oil temperatures and associated higher oil pressures. This is acceptable under these conditions but normal full throttle manifold pressure should be no greater than 36.5 in.Hg. The fuel flow will normally also increase in proportion to the increase in manifold pressure but should always be maintained within its dynamic green arc. If manifold pressure exceeds 37.5 in.Hg on cold oil takeoff or during full power climbs, reduce power to maintain no more than 37.5 in.Hg; if manifold pressure exceeds 36.5 in.Hg while oil temperature is 140°F or greater, manually reduce manifold pressure to at or below 36.5 in.Hg and recommend maintenance to resolve for future flights.

For takeoff over a gravel surface, advance Power Lever slowly. This allows the airplane to start rolling before high RPM is developed, and gravel will be blown behind the propeller rather than pulled into it.

Flap Settings: All takeoffs are accomplished with flaps set at 50%.

Takeoff Techniques: Soft or rough field takeoffs are performed with 50% flaps by lifting the airplane off the ground as soon as practical in a tail-low attitude. If no obstacles are ahead, the airplane should be leveled off immediately to accelerate to a higher climb speed.

Takeoffs into strong crosswinds are normally performed with the flaps set at 50% to minimize the drift angle immediately after takeoff. With the ailerons fully deflected into the wind, accelerate the airplane to a speed slightly higher than normal while decreasing the aileron deflection as speed increases then - with authority - rotate to prevent possibly settling back to the runway while drifting. When clear of the ground, make a coordinated turn into the wind to correct for drift.

• NOTE •

Fuel BOOST should be left ON during takeoff and for climb as required for vapor suppression with hot or warm fuel.

Normal Takeoff

1. Brakes .....RELEASE (STEER WITH RUDDER ONLY)
2. Power Lever ..... FULL FORWARD
3. Mixture.....SET TO TOP OF GREEN ARC
4. Engine Parameters.....CHECK WITHIN GREEN ARCS
5. Elevator Control.....ROTATE SMOOTHLY AT 77-80 KIAS
6. Flaps..... UP AT 90 KIAS, CLEAR OF OBSTACLES

Short Field Takeoff

1. Brakes .....HOLD
2. Power Lever ..... FULL FORWARD
3. Mixture.....SET TO TOP OF GREEN ARC
4. Engine Parameters.....CHECK WITHIN GREEN ARCS
5. Brakes .....RELEASE (STEER WITH RUDDER ONLY)
6. Elevator Control.....ROTATE SMOOTHLY AT 77 KIAS
7. Flaps..... UP AT 85 KIAS, CLEAR OF OBSTACLES

Full Power Climb: Rich of Peak Technique

The fuel pump should be in the BOOST position during takeoff and for climb as required for vapor suppression with hot or warm fuel. For maximum rate of climb, use the best rate-of-climb speeds shown in the Enroute Rate Of Climb Chart in Section 5.

If an obstruction dictates the use of a steep climb angle, the best angle-of-climb speed should be used. Climbs at speeds lower than the best rate-of-climb speed should be of short duration to avoid engine-cooling problems.

During full power, full rich climbs, fuel flow should be maintained in the green arc. If any cylinder head temperatures consistently exceeds 420 °F, use higher airspeeds for better cooling and increased engine life. Intermittent CHTs up to 420 °F are not a concern.

Use of High Boost / Prime Fuel Pump Setting

Under some extreme environmental conditions, the use of the fuel pump in the HIGH BOOST/PRIME position may be required in flight above 10,000 feet to adequately suppress vapor formation. This condition is most likely to occur on hot days with warm or hot fuel in the tanks. Above 10,000 feet, if there is a loss of fuel flow or vapor locking is suspected, turn the fuel pump to HIGH BOOST/PRIME position and reset the mixture as required to maintain adequate stable fuel flow. Vapor lock is most often indicated by one or more of the following:

- Fluctuations in normal fuel flow possibly coupled with abnormal engine operation
- Rising EGTs and TIT coupled with falling fuel flow
- Rising CHTs (late in the process)

(Continued on next page)

(Continued)

1. Oxygen ..... AS REQUIRED
2. Power Lever ..... FULL FORWARD
3. Mixture ..... MAINTAIN FUEL FLOW IN GREEN ARC
4. Flaps ..... VERIFY UP
5. Airspeed ..... 120 KIAS
6. Fuel Pump ..... BOOST
7. Fuel Flow ..... MONITOR
8. Engine Parameters ..... MONITOR

• NOTE •

The fuel pump is used for vapor suppression during climb. It is also recommended that the fuel pump be left on after leveling off for 30 minutes following a climb and anytime fuel flow or EGT anomalies occur.

Cruise Climb: Lean of Peak Technique

Cruise climb with the mixture lever set to a lean mixture setting (LOP) is acceptable provided CHTs remain under 420 ºF. This climb procedure may not be possible in hot weather, but in moderate temperature conditions, LOP cruise climbs provide extended range and better fuel economy. Depending on aircraft weight and OAT, LOP cruise climbs will result in 600 to 700 FPM rates of climb at 130-140 KIAS.

Target fuel flow is calculated to provide the approximate Lean of Peak / "Best Economy" fuel-to-air ratio. Dependent on OAT and airspeed, this setting may not guarantee cylinder head temperatures below 420 °F. If any CHT's are greater than 420 °F, lean the mixture to maintain cylinders below 420 °F. If cylinder head temperatures consistently exceed 420 °F, climbs should be made at full rich mixture as described in the Climb Checklist.

1. Power Lever.....REDUCE TO 30.5 IN.HG
2. Mixture .....LEAN TO CYAN TARGET OR LESS
3. Minimum Airspeed.....120 KIAS
4. Fuel Pump .....BOOST
5. Oxygen (if available) .....AS REQUIRED
   a. Oxygen Masks/Cannulas .....DON
   b. Oxygen System (OXY Switch) .....ON
   c. Flow Rate..... ADJUST FOR PLANNED CRUISE ALTITUDE
   d. Flowmeters and Quantity .....MONITOR
6. Cylinder Head Temperatures .....MONITOR

Cruise

Recommended cruise is at a Lean of Peak / "Best Economy" mixture setting. Cruise leaning, i.e. leaning below full rich fuel flow, is only approved with manifold pressure settings of 30.5 in.Hg or less. Once power is reduced below this level, the green arc expands and a cyan-colored target fuel flow indicator is displayed on the fuel flow gauge. With higher manifold pressures, the fuel flow gauge provides a narrow green arc which defines full rich fuel flow settings.

Target fuel flow is determined using a calculated engine air flow based on Engine Speed, Manifold Air Temperature and Manifold Air Pressure and indicates a fuel flow that will give the approximate air-to-fuel ratio for best economy operation. Alternatively, the mixture can be set by finding a fuel flow that provides peak TIT and then leaning until TIT is 50-75 °F less than its peak value.

Target Fuel Flow is advisory only. This indicator or the Peak leaning method will provide an initial lean point only. As this setting is dependent on ambient air temperatures, it may not ensure sufficient cylinder cooling. If any CHT are greater than 420 °F, lean the mixture to maintain cylinders below 420 °F. As an approximation, a 0.5 GPH reduction in fuel flow will reduce CHT by 15 °F.

Running the engine at mixture levels leaner than the target will improve cooling, but provide lower cruise power because engine power scales in proportion to fuel flow when the engine is running at lean of peak. Other than lower cruise power, the only undesirable affect of an overly lean-of-peak setting is engine misfire. Cruise mixture should be rich enough to avoid lean misfire, but no richer than target indicator for cruise.

• NOTE •

Serials w/ IPS: If in icing encounter or conditions, perform additional procedures in Serials w/ IPS Icing Conditions.

(Continued on next page)

(Continued)

1. Oxygen ..... AS REQUIRED
2. Power Lever ..... REDUCE TO 30.5 IN.HG OR LESS
3. Fuel Pump ..... AS REQUIRED

• **NOTE** •

The Fuel Pump should be set to BOOST during maneuvering flight (flight training maneuvers, chandelles, stalls, etc.).

The fuel pump is used for vapor suppression during climb. It is also recommended that the fuel pump be left in BOOST after leveling off for 30 minutes following a climb and anytime fuel flow or EGT anomalies occur. Under some previously described extreme environmental conditions, the use of HIGH BOOST/PRIME may be required for vapor suppression during cruise flight. The fuel pump can be returned to the BOOST or OFF position as conditions permit.

4. Mixture ..... LEAN TO CYAN TARGET OR LESS
5. Engine Parameters ..... MONITOR
6. Fuel Flow and Balance ..... MONITOR

Descent

1. Oxygen ..... AS REQUIRED
2. Altimeter ..... SET
3. Landing Lights (LAND Switch) ..... ON
4. Fuel Quantity ..... CHECK
5. Power Lever ..... AS REQUIRED

   For Rapid Descent:

   a. Power Lever ..... SMOOTHLY REDUCE MAP TO 18 - 20 IN.HG
6. Mixture ..... AS REQUIRED

   For Rapid Descent:

   a. Mixture ..... MAINTAIN CHTS ABOVE 240 °F
7. Seats and Seat Belts ..... SECURE
8. Brake Pressure ..... CHECK

• **NOTE** •

Avoid prolonged idle settings. Maintain a CHT of 240 °F (116 °C) or greater.

Before Landing

1. Fuel Pump ..... BOOST
2. Mixture ..... FULL RICH
3. Flaps ..... AS REQUIRED
4. Autopilot ..... AS REQUIRED

Landing

• CAUTION •

Landings should be made with full flaps. Landings with less than full flaps are recommended only if the flaps fail to deploy or to extend the aircraft's glide distance due to engine malfunction. Landings with flaps at 50% or 0% power should be used to achieve a normal glide path and low descent rate. Flare should be minimized. Limit flap deflections to 50% if ice contaminated

• NOTE •

Serials w/ IPS: If icing conditions will exist for approach and/or landing perform additional procedures in Serials w/ IPS: Icing Conditions.

Normal Landing

1. Flaps 100%
2. Airspeed ..... 80 - 85 KIAS
3. Power Lever ..... AS REQUIRED

   After touchdown:

4. Brakes ..... AS REQUIRED

Normal landings are made with full flaps with power on or off. Surface winds and air turbulence are usually the primary factors in determining the most comfortable approach speeds.

Actual touchdown should be made with power off and on the main wheels first to reduce the landing speed and subsequent need for braking. Gently lower the nose wheel to the runway after airplane speed has diminished. This is especially important for rough or soft field landings.

Short Field Landing

1. Flaps 100%
2. Airspeed ..... 79 KIAS
3. Power Lever ..... AS REQUIRED

   After clear of obstacles:

4. Power Lever ..... REDUCE TO IDLE

   After touchdown:

5. Brakes ..... MAXIMUM PILOT EFFORT W/O SKIDDING

For a short field landing in smooth air conditions, make an approach at 79 KIAS with full flaps using enough power to control the glide path (slightly higher approach speeds should be used under turbulent air conditions).

After all approach obstacles are cleared, progressively reduce power to reach idle just before touchdown and maintain the approach speed by lowering the nose of the airplane.

Touchdown should be made power-off and on the main wheels first. Immediately after touchdown, lower the nose wheel and apply braking as required. For maximum brake effectiveness, retract the flaps, hold the side stick full back, and apply maximum brake pressure without skidding.

Crosswind Landing

Normal crosswind landings are made with full flaps. Avoid prolonged slips. After touchdown, hold a straight course with rudder and brakes as required.

The maximum allowable crosswind velocity is dependent upon pilot capability as well as aircraft limitations. Operation in direct crosswinds of 21 knots has been demonstrated.

Balked Landing/Go-Around

In a balked landing (go-around) climb apply full power, then reduce the flap setting to 50%. If obstacles must be cleared during the go-around, climb at the best angle of climb with 50% flaps. After clearing any obstacles, retract the flaps and accelerate to the normal flaps-up climb speed.

1. Power Lever ..... FULL FORWARD
2. TO/GA Button ..... PRESS
3. Flaps 50%
4. Airspeed ..... 80 - 85 KIAS

   After clear of obstacles:

5. Flaps ..... UP

After Landing

1. Power Lever ..... 1000 RPM
2. Fuel Pump ..... OFF
3. Mixture ..... LEAN TO OBTAIN MAXIMUM IDLE RPM
4. Flaps ..... UP
5. Lights ..... AS REQUIRED
6. Probe Heat Switch (if installed) ..... OFF

• NOTE •

As the airplane slows, the rudder becomes less effective and taxiing is accomplished using differential braking.

Shutdown

1. Power Lever ..... IDLE
2. Engine Knob ..... CYCLE

• CAUTION •

Verify the engine hesitates as the knob cycles through the "OFF" position. If the engine does not hesitate, one or both magnetos are not grounded. Prominently mark the propeller as being "Hot," and contact maintenance personnel immediately.

3. Mixture ..... CUTOFF
4. All Switches ..... OFF
5. Engine Knob ..... OFF
6. ELT ..... TRANSMIT LIGHT OUT

• NOTE •

After a hard landing, the ELT may activate. If this is suspected, press the RESET button.

7. CAPS Pin ..... REPLACE
8. Chocks, Tie-downs, Pitot Covers ..... AS REQUIRED

• NOTE •

Serials w/ IPS: If IPS was used during flight perform additional procedures in Icing Conditions.

Stalls

Aircraft stall characteristics are conventional. Power-off stalls may be accompanied by a slight nose bobbing if full aft stick is held. Power-on stalls are marked by a high sink rate at full aft stick. Power-off stall speeds at maximum weight for both forward and aft CG positions are presented in Section 5 - Stall Speeds.

When practicing stalls at altitude, as the airspeed is slowly reduced, you will notice a slight airframe buffet, hear the stall warning horn sound, and the "stall, stall, stall" aural alert between 5 and 10 knots before the stall, feel a stick shaker vibration in the control yoke, and see the Crew Alerting System display a STALL Warning annunciation. Normally, the stall is marked by a gentle nose drop and the wings can easily be held level or in the bank with coordinated use of the ailerons and rudder. Upon stall warning in flight, recovery is accomplished by immediately reducing back pressure to reduce the angle of attack and to maintain safe airspeed, adding power as required and rolling wings level with coordinated use of the controls.

• WARNING •

Use care to avoid uncoordinated, abrupt or abused control inputs when close to stall.

• NOTE •

If Stall Warning is inoperative, Autopilot Underspeed Protection will not be provided in Altitude Critical Modes (ALT, GS, GP, TO and GA), and Low Speed ESP will not be available.

Environmental Conditions

Cold Weather Operation

• CAUTION •

An engine that has been superficially warmed, may start and appear to run satisfactorily, but can be damaged from lack of lubrication due to the congealed oil blocking proper oil flow through the engine. The amount of damage will vary and may not become evident for many hours. However, the engine may be severely damaged and may fail shortly following application of high power. Proper procedures require thorough application of preheat to all parts of the engine. Hot air must be applied directly to the oil sump and external oil lines as well as the cylinders, air intake and oil cooler. Because excessively hot air can damage non-metallic components such as composite parts, seals, hoses, and drive belts, do not attempt to hasten the preheat process.

Starting

If the engine has been cold soaked, it is recommended that the propeller be pulled through by hand several times to break loose or limber the oil. This procedure will reduce power draw on the battery if a battery start is made.

When the engine has been exposed to temperatures at or below 20 °F (-7 °C) for a period of two hours or more, the use of an external pre-heater and external power is recommended. Failure to properly preheat a cold-soaked engine may result in oil congealing within the engine, oil hoses, and oil cooler with subsequent loss of oil flow, possible internal damage to the engine, and subsequent engine failure.

If the engine does not start during the first few attempts, or if engine firing diminishes in strength, the spark plugs have probably frosted over. Preheat must be used before another start is attempted.

• NOTE •

When the oil temperature has reached 100 °F (38 °C) and oil pressure does not exceed 70 psi at 2500 RPM, the engine has been warmed sufficiently to accept full rated power.

(Continued on next page.)

(Continued)

1. Engine Knob ..... OFF

• WARNING •

Use caution when pulling the propeller through by hand. Make sure engine knob is OFF and then act as if the engine will start.

2. Propeller ..... HAND TURN SEVERAL ROTATIONS
3. Mixture ..... FULL RICH
4. Power Lever ..... FULL FORWARD
5. Fuel Pump ..... HIGH BOOST/PRIME, THEN BOOST

• NOTE •

In temperatures down to 20 °F, hold Fuel Pump switch to HIGH BOOST/PRIME for 15 seconds prior to starting.

6. Propeller Area ..... CLEAR
7. Power Lever ..... OPEN ¼ INCH
8. Engine Knob ..... BOTH
9. Starter ..... ENGAGE

• CAUTION •

Limit cranking to intervals of 10 seconds with a 20 second cooling period between cranks.

10. Power Lever ..... RETARD (MAINTAIN 1000 RPM)
11. Oil Pressure ..... CHECK
12. ALT 1 and ALT 2 Switches ..... ON
13. Engine Parameters ..... MONITOR
14. External Power (If applicable) ..... DISCONNECT
15. Strobe Lights (STRB Switch) ..... ON

Hot Weather Operation

Avoid prolonged engine operation on the ground. Fuel BOOST must be ON for engine start and takeoff, and should be ON during climb for vapor suppression which could occur under hot ambient conditions or after extended idle.

Ground Operation of Air Conditioning System (Optional)

• NOTE •

To facilitate faster cabin cooling, prior to engine start leave the cabin doors open for a short time to allow hot air to escape cabin.

1. Control Panel..... SELECT DESIRED MODE AND TEMPERATURE
2. Voltage.....MONITOR

• NOTE •

Decrease electrical load if battery discharge is noted.

3. CAS Messages.....CHECK
   a) Verify caution not illuminated and positive amps indication.
4. Engine Parameters .....CHECK

Extended Ground Operation

For airplanes that experience prolonged engine operation on the ground, the following procedure is recommended to reduce potential for spark plug lead fouling and lead build-up on engine valve guides.

1. Set throttle to 1200 RPM.
2. Lean the mixture for maximum RPM.
3. Reduce throttle to RPM for continued ground operations (800 - 1000 RPM is recommended).

• WARNING •

Before takeoff, the mixture lever must be returned to the full rich position.

• NOTE •

If further ground operations will be required after the Before Takeoff Checklist is completed, lean the mixture again (as described above) until ready for the Takeoff Checklist.

Noise Characteristics/Abatement

The certificated noise levels for the aircraft established in accordance with CFR 36 Appendix G are:

Configuration	Actual	Maximum Allowable
Hartzell 3-blade Propeller, PHC-J3Y1F-1N/N7605(C)(B)	81.5 dB(A)	88.0 dB(A)

No determination has been made by the Federal Aviation Administration that the noise levels of this airplane are or should be acceptable or unacceptable for operation at, into, or out of, any airport. The above noise levels were established at 3600 pounds takeoff weight and 2500 RPM.

The following suggested procedures minimize environmental noise when operating the aircraft.

• **NOTE** •

Do not follow these noise abatement procedures where they conflict with Air Traffic Control clearances or instructions, weather considerations, or wherever they would reduce safety.

1. When operating VFR over noise-sensitive areas, such as outdoor events, parks, and recreational areas, fly not less than 2000 feet above the surface even though flight at a lower level may be allowed.
2. For departure from or approach to an airport, avoid prolonged flight at low altitude near noise-sensitive areas.

Serials w/ IPS: Icing Conditions

• WARNING •

Holding in icing conditions for longer than 45 minutes may reduce margins and could result in inadequate handling and control characteristics.

Flight into known icing conditions is not advised if porous panels do not fully "wet-out" prior to entering icing conditions, or if IPS CAS messages persist.

• CAUTION •

Prolonged operation of the IPS in clear air, above 15,000 feet MSL and temperatures less than -4 °F (-20 °C) can result in “flash” evaporation of water and alcohol from the IPS fluid. This evaporation results in a glycol rich fluid that could become “gel” like on the wing surface until aircraft enters precipitation or warmer temperatures.

Limit ground operations of Lift Transducer Heat (PROBE HEAT) to 45 seconds. Operation of Lift Transducer Heat in excess of 45 seconds while on the ground may cause excessive temperature on the lift transducer faceplate and surrounding wing skin.

• NOTE •

The IPS is most effective when operated as an ice protection system to prevent ice accretions on protected surfaces. For optimal performance, the system should be primed on the ground to verify all protected surfaces wet-out fully. The system should then be activated prior to entering icing conditions to confirm the protected surfaces wet-out fully before ice accretion begins.

The IPS is approved for operation with ice protection fluid that has a very temperature-dependent viscosity characteristic. As the temperature of the fluid rises above freezing (32 °F / 0 °C), the fluid becomes much less viscous (thins) and passes through the porous membrane of the panels with less resistance (pressure drop). This decrease in pressure drop reduces the pressure in the panel reservoir which may not be adequate to wet-out the entire panel if the Preflight Inspection is performed at warmer temperatures.

Increasing the IPS flow rate (MAX vs. HIGH or HIGH w/ BKUP vs. HIGH) will increase the arterial pressure of the system which promotes the complete wet-out of the porous panels.

Maximum Operating Time

Use of the windshield de-ice system will reduce the maximum available operating time of the system.

Normal Flow Duration .....150 Minutes (3.2 gph)

High Flow Duration .....75 Minutes (6.4 gph)

Maximum Flow Duration .....37.5 Minutes (12.8 gph)

Endurance (at minimum dispatch quantity):

NORM.....90 Minutes

HIGH.....45 Minutes

MAX.....22.5 Minutes

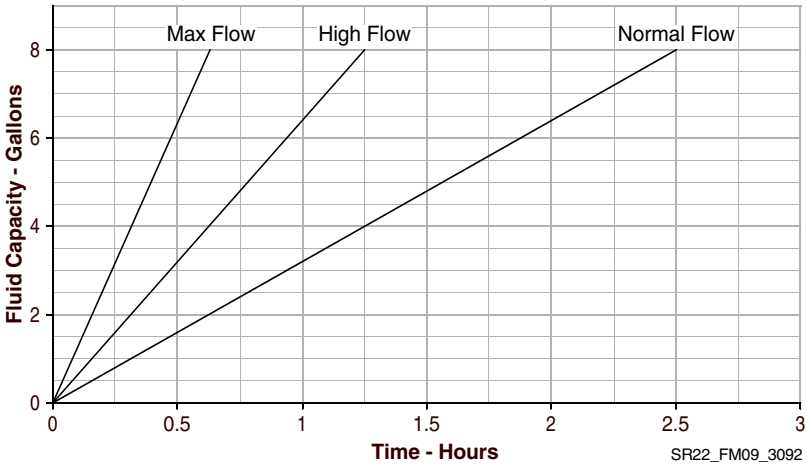

Preflight Inspection

• WARNING •

In cold weather, remove all frost (polished or not), ice, snow, or slush from fuselage, wing, stabilizers, control surfaces, and engine inlet. Ensure that control surfaces are free of internal ice or debris. Check that wheels are free of snow and ice accumulation.
Failure to comply may result in significant aircraft damage, loss of aircraft, and/or loss of life.

1. Cabin
   a. Circuit Breakers ..... SET
   b. BAT 1 Switch ..... ON
   c. Cabin Speaker ..... ON
   d. Cabin Doors ..... CLOSE
   e. W/S Push-Button ..... PRESS
      (1) Verify evidence of deicing fluid from spray nozzles.
   f. BKUP Switch ..... ON
      (1) Metering Pump. ..... VERIFY CONTINUOUSLY ON
      (2) Deicing Fluid and Endurance Indications. ..... CHECK
   g. BKUP Switch ..... OFF
   h. ICE PROTECT System Switch ..... ON
   i. ICE PROTECT Mode Switch ..... NORM
      (1) Metering Pump. ..... VERIFY 30 S ON, 90 S OFF
      (2) Deicing Fluid and Endurance Indications. ..... CHECK
   j. ICE PROTECT Mode Switch ..... HIGH
      (1) Metering Pump ..... VERIFY CONTINOUSLY ON
      (2) Deicing Fluid and Endurance Indications. ..... CHECK
   k. ICE Inspection Lights Switch ..... ON
      (1) Verify LH and RH Operation.
   l. Fluid Quantity ..... VERIFY 5 GALLON MINIMUM
   m. ICE PROTECT System Switch ..... OFF

(Continued on next page)

(Continued)

2. Empennage
   a. Stabilizers Porous Panels ..... CONDITION AND SECURITY
      (1) Verify evidence of deicing fluid along length of panels and elevator horns.
3. Right Wing Forward and Main Gear
   a. IPS Fluid Tank ..... VERIFY DESIRED QUANTITY
      (1) Filler Cap ..... CONDITION AND SECURITY
      (2) Fluid Vent (underside wing) ..... UNOBSTRUCTED
   b. Porous Panels ..... CONDITION AND SECURITY
      (1) Verify evidence of deicing fluid along length of panels.

• WARNING •

Lift Transducer Faceplate and Vane may be HOT.

   c. Stall Warning Audio Alert ..... TEST
      (1) Raise Lift Transducer stall vane.
4. Nose, Right Side
   a. Ice Inspection Light ..... CONDITION AND SECURITY
5. Nose Gear, Propeller, Spinner
   a. Slinger Ring ..... EVIDENCE OF DEICING FLUID
6. Nose, Left Side
   a. Ice Inspection Light ..... CONDITION AND SECURITY
   b. Windshield Spray Nozzles ..... CONDITION AND SECURITY
7. Left Wing Forward and Main Gear
   a. IPS Fluid Tank ..... VERIFY DESIRED QUANTITY
      (1) Filler Cap ..... CONDITION AND SECURITY
      (2) Fluid Vent (underside wing) ..... UNOBSTRUCTED
   b. Porous Panels ..... CONDITION AND SECURITY
      (1) Verify evidence of deicing fluid along length of panels.
8. Cabin
   a. BAT 1 Switch ..... OFF
   b. Cabin Speaker ..... OFF

Ice Formation Determination

Typically, a leading edge with a small radius will collect ice more quickly than a leading edge with a large radius. To help monitor possible ice accumulation, a thin metal tab is attached to the outboard end of the RH and LH stall strips. In some icing conditions this tab may be the first place that airframe ice accretion is noticeable. Additionally, refer to other areas of the aircraft, such as the horizontal tail and lower windscreen, to aid in determining if ice is accreting to the aircraft.

Before Takeoff

If icing conditions are anticipated immediately after takeoff:

1. Probe Heat Switch (if installed)..... ON
2. Temperature Selector..... HOT
3. Vent Selector.....DEFROST
4. Airflow Selector ..... MAXIMUM
5. Panel Vents ..... CLOSED
6. Ice Inspection Lights..... AS REQUIRED
7. Verify airframe is free of contamination immediately before takeoff.

After Takeoff:

1. ICE PROTECT System Switch ..... ON
2. ICE PROTECT Mode Switch ..... HIGH

In Flight

If Inadvertent Icing Encounter or Icing Conditions Exist

1. Probe Heat Switch (if installed) ..... VERIFY ON
2. ICE PROTECT System Switch ..... ON
3. ICE PROTECT Mode Switch ..... NORM
4. W/S Push Button ..... PRESS (AS REQ'D)
5. Ice Inspection Lights ..... AS REQUIRED
6. Monitor ice accumulation.
   - ◆ If ice accretions persist on protected surfaces following each cycle:
     a. ICE PROTECT Mode Switch ..... HIGH
   - ◆ If ice continues accumulating on protected surfaces:
     a. ICE PROTECT Mode Push Button ..... MAX
   - ◆ If ice accretions do not shed from protected surfaces:
     a. BKUP Switch ..... ON
     b. W/S Push Button ..... PRESS (AS REQ'D)
     c. Perform Ice Protection System Failure/ Excessive Ice Accumulation.
     d. Airspeed ..... MAINTAIN 95-177 KIAS AND LESS THAN 204 KTAS

While in Icing Conditions

1. Flaps ..... UP
2. Ice Inspection Lights ..... AS REQUIRED
3. Temperature Selector ..... HOT
4. Vent Selector ..... DEFROST
5. Airflow Selector ..... MAXIMUM
6. Panel Vents ..... CLOSED
7. Fluid Quantity and Endurance ..... MONITOR
   a. Ensure adequate quantity to complete flight.

After Leaving Icing Conditions

1. IPS ..... OFF
2. Ice Inspection Lights ..... AS REQUIRED
3. Temperature Selector ..... AS REQUIRED
4. Vent Selector ..... AS REQUIRED
5. Airflow Selector ..... AS REQUIRED
6. Panel Vents ..... CLOSED
7. W/S Push Button ..... PRESS AS REQUIRED

Cruise

During icing encounters in cruise, increase engine power to maintain cruise speed as ice accumulates on the unprotected areas and causes the aircraft to slow down.

The autopilot may be used in icing conditions. However, every 30 minutes the autopilot should be disconnected to detect any out-of-trim conditions caused by ice buildup. If significant out-of-trim or other anomalous conditions are detected, the autopilot should remain off for the remainder of the icing encounter.

When disconnecting the autopilot with ice accretions on the airplane, the pilot should be alert for out-of-trim forces.

Approach and Landing

Recommended Holding Airspeed.....120 KIAS

If Icing Conditions Exist:

1. ICE PROTECT System Switch..... ON
2. ICE PROTECT Mode Switch..... HIGH
3. Monitor ice accumulation.
   - ◆ If ice continues accumulating on protected surfaces:
     a. ICE PROTECT Mode Push Button..... MAX
   - ◆ If ice accretions do not shed from protected surfaces:
     a. BKUP Switch..... ON
     b. Perform Ice Protection System Failure/ Excessive Ice Accumulation.
4. W/S Push Button ..... PRESS AS REQUIRED

• CAUTION •

To prevent an obstructed view due to residual deicing fluid on windshield, do not operate windshield IPS within 30 seconds of landing.

5. Ice Inspection Lights ..... AS REQUIRED
6. Flaps..... 50%
7. Airspeed .....MINIMUM OF 95 KIAS
8. Airspeed on Short Final ..... 88 KIAS

After Landing and Shutdown

1. Probe Heat Switch (if installed) .....OFF
2. ICE PROTECT System Switch.....OFF
3. BKUP Switch .....OFF
4. Ice Inspection Lights ..... OFF

• NOTE •

When the IPS has been used, avoid touching the airframe structure or windshield as they will be partially covered with deicing fluid. Clean the deicing fluid from the windshield and the porous panels as described in Section 8, Handling, Service, & Maintenance.

Intentionally Left Blank

Section 5: Performance Data

Table of Contents

Introduction 3
Standard Charts 3
Associated Conditions Affecting Performance 3
Temperature Conversion 4
OAT for International Standard Atmosphere (ISA) Condition 5
Pressure Conversion - Inches of Mercury to Millibars 6
Fuel Quantity Conversion - U.S. Gallons to Liters 7
Weight Conversion - Pounds to Kilograms 8
Distance Conversion: Feet to Meters 9
Length Conversion: Inches to Centimeters 10
Airspeed Calibration 11
Normal Static Source 11
Alternate Static Source 12
Altitude Correction 13
Normal Static Source: Primary Flight Display 13
Normal Static Source: Standby Altimeter 14
Alternate Static Source: Primary Flight Display 15
Alternate Static Source: Standby Altimeter 16
Stall Speeds 17
Stall Speeds w/ Ice Accumulation - Serials w/ IPS 18
Wind Components 19
Takeoff Distance 20
Takeoff Weight 3600 lb (1633 kg) 20
Takeoff Weight 2900 lb (1315 kg) 22
Takeoff Climb Gradient 24
Takeoff Rate of Climb 25
Enroute Climb 26
Enroute Climb Gradient 26
Enroute Rate Of Climb 28
Enroute Climb Gradient w/ Ice Accumulation - Serials w/ IPS 30
Enroute Rate Of Climb w/ Ice Accumulation - Serials w/ IPS 32
Time, Fuel, & Distance to Climb: Full Power 34
Time, Fuel, & Distance to Climb: Full Power 34
Time, Fuel, & Distance to Climb: Full Power w/ Ice Accum. 36
Time, Fuel, & Distance to Climb: Cruise Climb 38
Cruise Performance 40

Cruise Performance....40
Cruise Performance w/ Ice Accumulation - Serials w/ IPS....43
Range / Endurance Profile: Full Power Climb....45
Range / Endurance Profile: Full Power Climb....45
Range / Endurance Profile: Full Power Climb w/ Ice Accumulation 49
Range / Endurance Profile: Cruise Climb....52
Balked Landing....56
Balked Climb Gradient....56
Balked Landing Rate of Climb....57
Balked Landing Climb Gradient w/ Ice Accumulation....58
Balked Landing Rate of Climb w/ Ice Accumulation....59
Landing Distance....60
Landing Distance - 100% Flaps....60
Landing Distance Table - Flaps 100%....61
Landing Distance - 50% Flaps....62
Landing Distance Table - Flaps 50%....63
Landing Distance - Flaps UP....64
Landing Distance Table - Flaps UP....65
Landing Distance - 50% w/ Ice Accumulation - Serials w/ IPS....66
Landing Distance Table - Flaps 50% w/ Ice Accumulation....67

Introduction

Performance data in this section are presented for operational planning so that you will know what performance to expect from the airplane under various ambient and field conditions. Performance data are presented for takeoff, climb, and cruise (including range & endurance).

All data based on published normal procedures.

Standard Charts

Associated Conditions Affecting Performance

Computed performance data in this section are based upon data derived from actual flight testing with the airplane and engine in good condition and using average piloting techniques. Unless specifically noted in the "Conditions" notes presented with each table, ambient conditions are for a standard day. Flap position as well as thrust setting technique is similarly noted with each table.

The charts in this section provide data over temperature ranges as specified on the chart. If ambient temperature is below the chart value, use the lowest temperature shown to compute performance. This will result in more conservative performance calculations. If ambient temperature is above the chart value, use caution as performance degrades rapidly at higher temperatures.

Serials w/ optional Air Conditioning System: Brake Horsepower is reduced by approximately 6 BHP.

Serials w/ IPS: Airplane stall speeds and takeoff/climb/glide/landing performance without ice accumulation are unchanged with the installation of the Ice Protection System. Significant climb and cruise performance degradation, range reduction, as well as buffet and stall speed increase can be expected if ice accumulates on the airframe. Residual ice on the protected areas and ice accumulation on the unprotected areas of the airplane can cause noticeable performance losses and stall speed increases even with IPS operating.

RELATED LINKS:

Refer to "Table 2: Meteorological Terminology" in Section 1: General.

Temperature Conversion

Temp to Convert °C or °F			Temp to Convert °C or °F			Temp to Convert °C or °F		
°C	< >	°F	°C	< >	°F	°C	< >	°F
-50	-58	-72	-17	2	36	17	62	144
-49	-56	-69	-16	4	39	18	64	147
-48	-54	-65	-14	6	43	19	66	151
-47	-52	-62	-13	8	46	20	68	154
-46	-50	-58	-12	10	50	21	70	158
-44	-48	-54	-11	12	54	22	72	162
-43	-46	-51	-10	14	57	23	74	165
-42	-44	-47	-9	16	61	24	76	169
-41	-42	-44	-8	18	64	26	78	172
-40	-40	-40	-7	20	68	27	80	176
-39	-38	-36	-6	22	72	28	82	180
-38	-36	-33	-4	24	75	29	84	183
-37	-34	-29	-3	26	79	30	86	187
-36	-32	-26	-2	28	82	31	88	190
-34	-30	-22	-1	30	86	32	90	194
-33	-28	-18	0	32	90	33	92	198
-32	-26	-15	1	34	93	34	94	201
-31	-24	-11	2	36	97	36	96	205
-30	-22	-8	3	38	100	37	98	208
-29	-20	-4	4	40	104	38	100	212
-28	-18	0	6	42	108	39	102	216
-27	-16	3	7	44	111	40	104	219
-26	-14	7	8	46	115	41	106	223
-24	-12	10	9	48	118	42	108	226
-23	-10	14	10	50	122	43	110	230
-22	-8	18	11	52	126	44	112	234
-21	-6	21	12	54	129	46	114	237
-20	-4	25	13	56	133	47	116	241
-19	-2	28	14	58	136	48	118	244
-18	0	32	16	60	140	49	120	248

OAT for International Standard Atmosphere (ISA) Condition

Press Alt FT	ISA -30 °C		ISA -15 °C		ISA		ISA +15 °C		ISA +30 °C	
	°C	°F	°C	°F	°C	°F	°C	°F	°C	°F
SL	-15	5	0	32	15	59	30	86	45	113
1000	-17	1	-2	29	13	56	28	83	43	110
2000	-19	-2	-4	25	11	52	26	79	41	106
3000	-21	-5	-6	22	9	49	24	76	39	103
4000	-23	-9	-8	18	7	45	22	72	37	99
5000	-25	-13	-10	14	5	41	20	68	35	95
6000	-27	-16	-12	11	3	38	18	65	33	92
7000	-29	-20	-14	7	1	34	16	61	31	88
8000	-31	-23	-16	4	-1	31	14	58	29	85
9000	-33	-27	-18	0	-3	27	12	54	27	81
10,000	-35	-30	-20	-3	-5	24	10	51	25	78
11,000	-37	-34	-22	-7	-7	20	8	47	23	74
12,000	-39	-38	-24	-11	-9	16	6	43	21	70
13,000	-41	-41	-26	-14	-11	13	4	40	19	67
14,000	-43	-45	-28	-18	-13	9	2	36	17	63
15,000	-45	-48	-30	-21	-15	6	0	33	15	60
16,000	-47	-52	-32	-25	-17	2	-2	29	13	56
17,000	-49	-55	-34	-28	-19	-1	-4	26	11	53
18,000	-51	-59	-36	-32	-21	-5	-6	22	9	49
19,000	-52	-62	-37	-35	-22	-8	-7	19	8	46
20,000	-54	-66	-39	-39	-24	-12	-9	15	6	42
21,000	-56	-70	-41	-43	-26	-16	-11	11	4	38
22,000	-58	-73	-43	-46	-28	-19	-13	8	2	35
23,000	-60	-77	-45	-50	-30	-23	-15	4	0	31
24,000	-62	-80	-47	-53	-32	-26	-17	1	-2	28
25,000	-64	-84	-49	-57	-34	-30	-19	-3	-4	24

Pressure Conversion - Inches of Mercury to Millibars

Inches Of Mercury	Millibars
28.0	948
28.1	951
28.2	955
28.3	958
28.4	962
28.5	965
28.6	968
28.7	972
28.8	975
28.9	979
29.0	982
29.1	985
29.2	989
29.3	992
29.4	995
29.5	999

Inches Of Mercury	Millibars
29.6	1002
29.7	1006
29.8	1009
29.9	1012
30.0	1016
30.1	1019
30.2	1023
30.3	1026
30.4	1029
30.5	1033
30.6	1036
30.7	1040
30.8	1043
30.9	1046
31.0	1050

Fuel Quantity Conversion - U.S. Gallons to Liters

• NOTE •

Fuel mass provided for reference assuming nominal 6.0 lb/gallon at 59 °F (15 °C).

U.S. Gallons (Liters)	Lb (Kg)
10 (37.9)	60 (27.2)
15 (56.8)	90 (40.8)
20 (75.7)	120 (54.4)
25 (94.6)	150 (68.0)
30 (113.6)	168 (76.2)
35 (132.5)	210 (95.3)
40 (151.4)	240 (108.9)
45 (170.3)	270 (122.5)
47.25 (178.9)	283.5 (128.6)
50 (189.3)	300 (136.1)

U.S. Gallons (Liters)	Lb (Kg)
55 (208.2)	330 (150.0)
60 (227.1)	360 (163.3)
65 (246.1)	390 (176.9)
70 (265.0)	420 (190.5)
75 (283.9)	450 (204.1)
80 (302.8)	480 (217.7)
85 (321.8)	510 (231.3)
90 (340.7)	540 (244.9)
94.5 (357.7)	567 (257.2)

Weight Conversion - Pounds to Kilograms

Pounds	Kilograms
2000	907.2
2100	952.5
2200	998.0
2300	1043.3
2400	1088.6
2500	1134.0
2600	1179.3
2700	1224.7
2800	1270.1

Pounds	Kilograms
2900	1315.4
3000	1360.1
3100	1406.1
3200	1451.5
3300	1497.0
3400	1542.2
3500	1587.6
3600	1633.0

Distance Conversion: Feet to Meters

Feet	Meters
10	3
20	6
30	9
40	12
50	15
60	18
70	21
80	24
90	27
100	30
200	61
300	91
400	122
500	152

Feet	Meters
600	183
700	213
800	244
900	274
1000	305
2000	610
3000	914
4000	1219
5000	1524
6000	1829
7000	2134
8000	2438
9000	2743
10,000	3048

Length Conversion: Inches to Centimeters

Inches	Centimeters
1	2.54
2	5.08
3	7.62
4	10.16
5	12.70
6	15.24
7	17.78
8	20.32
9	22.86
10	25.40
11	27.94
12	30.48

Inches	Centimeters
20	50.8
30	76.2
40	101.6
50	127
60	142.4
70	177.8
80	203.2
90	228.6
100	254
150	381
200	508
250	635

Airspeed Calibration

Normal Static Source

Conditions:

- Power for level flight or maximum continuous, whichever is less.

• **NOTE** •

Indicated airspeed values assume zero instrument error.

KIAS	KCAS Flap Deflection		
	Flaps 0%	Flaps 50%	Flaps 100%
60	57	50	56
70	68	66	69
80	79	80	80
90	89	92	91
100	100	102	102
110	111	113	113
120	121	123	
130	132	133	
140	142	144	
150	152	154	
160	163		
170	173		
180	183		
190	193		
200	203		
210	213		

Alternate Static Source

Conditions:

- Power for level flight or maximum continuous, whichever is less.
- Heater, Defroster & Vents .....ON

• **NOTE** •

Indicated airspeed values assume zero instrument error.

KIAS	KCAS Flap Deflection		
	Flaps 0%	Flaps 50%	Flaps 100%
60	57	60	60
70	67	70	70
80	78	79	79
90	88	89	89
100	98	99	98
110	107	109	108
120	117	118	
130	127	128	
140	137	138	
150	146	148	
160	156		
170	166		
180	175		
190	185		
200	194		
210	204		

Altitude Correction

Normal Static Source: Primary Flight Display

Conditions:

- Power for level flight or maximum continuous, whichever is less.
- 3600 LB

• **NOTE** •

Add correction to desired altitude to obtain indicated altitude to fly.

Indicated airspeed values assume zero instrument error.

KIAS: Knots Indicated Airspeed.

Flaps	Density Alt	CORRECTION TO BE ADDED (ft)									
		Normal Static Source - KIAS									
		60	70	80	90	100	120	140	160	180	200
0%	S.L.		0	0	0	0	0	0	0	0	0
	5000		0	0	0	0	0	0	0	0	0
	10000		0	0	0	0	0	0	0	0	0
	15000		0	0	0	0	0	0	0	0	0
	20000		0	0	0	0	0	0	0	0	0
	25000		0	0	0	0	0	0	0	0	0
50%	S.L.		9	-9	-19	-22	-19	-22	-28		
	5000		10	-10	-22	-25	-22	-25	-33		
	10000		12	-12	-25	-29	-25	-30	-38		
100%	S.L.	22	-6	-10	-14	-19	-18				
	5000	25	-7	-12	-16	-22	-21				
	10000	29	-9	-14	-18	-25	-25				

Normal Static Source: Standby Altimeter

Conditions:

- Power for level flight or maximum continuous, whichever is less.
- 3600 LB

• NOTE •

Add correction to desired altitude to obtain indicated altitude to fly.

Indicated airspeed values assume zero instrument error.

KIAS: Knots Indicated Airspeed.

Flaps	Density Alt	CORRECTION TO BE ADDED (ft)									
		Normal Static Source - KIAS									
		60	70	80	90	100	120	140	160	180	200
0%	S.L.		12	9	5	0	-11	-24	-38	-50	-61
	5000		14	10	6	0	-13	-28	-44	-58	-71
	10000		16	12	7	0	-16	-33	-51	-68	-82
	15000		19	14	8	0	-18	-39	-60	-80	-97
	20000		23	17	9	0	-21	-46	-71	-95	-114
	25000		27	20	11	0	-26	-55	-85	-112	-136
50%	S.L.		21	0	-14	-21	-30	-46	-66		
	5000		24	0	-16	-25	-35	-54	-77		
	10000		28	0	-18	-29	-41	-63	-90		
100%	S.L.	22	6	-1	-9	-19	-30				
	5000	25	7	-1	-10	-22	-34				
	10000	29	8	-2	-12	-25	-40				

Alternate Static Source: Primary Flight Display

Conditions:

- Power for level flight or maximum continuous, whichever is less.
- Heater, Defroster & Vents ..... ON

• **NOTE** •

Add correction to desired altitude to obtain indicated altitude to fly.

Indicated airspeed values assume zero instrument error.

KIAS: Knots Indicated Airspeed.

Flaps	Density Alt	CORRECTION TO BE ADDED (ft)									
		Alternate Static Source - KIAS									
		60	70	80	90	100	120	140	160	180	200
0%	S.L.		4	8	14	21	40	64	94	127	164
	5000		4	10	16	25	47	75	109	148	191
	10000		5	11	19	29	55	87	127	172	222
	15000		6	13	23	34	64	102	149	202	261
	20000		7	15	27	40	76	121	176	239	308
	25000		8	18	32	48	90	144	209	284	366
50%	S.L.		-10	-4	4	11	29	50	80		
	5000		-12	-4	4	13	33	58	93		
	10000		-14	-5	5	15	39	68	108		
100%	S.L.	-2	-9	-2	6	15	39				
	5000	-2	-11	-2	7	17	45				
	10000	-3	-13	-3	8	20	53				

Alternate Static Source: Standby Altimeter

Conditions:

- Power for level flight or maximum continuous, whichever is less.
- Heater, Defroster & Vents .....ON

• **NOTE** •

Add correction to desired altitude to obtain indicated altitude to fly.

Indicated airspeed values assume zero instrument error.

KIAS: Knots Indicated Airspeed.

Flaps	Density Alt	CORRECTION TO BE ADDED (ft)									
		Alternate Static Source - KIAS									
		60	70	80	90	100	120	140	160	180	200
0%	S.L.		16	17	19	22	29	40	56	77	103
	5000		18	20	22	25	33	46	65	89	120
	10000		21	23	26	29	39	54	75	104	140
	15000		25	27	30	34	46	63	89	122	164
	20000		29	32	36	41	54	75	105	144	194
	25000		35	38	43	48	64	89	124	171	231
50%	S.L.		2	5	9	11	17	25	42		
	5000		2	6	10	13	20	30	49		
	10000		3	7	12	16	23	34	57		
100%	S.L.	-2	3	7	11	15	27				
	5000	-2	3	8	12	18	32				
	10000	-3	4	9	15	20	37				

Stall Speeds

• NOTE •

KIAS values may not be accurate at stall.

Bank Angle Deg	STALL SPEEDS AT IDLE					
	Flaps UP		Flaps 50%		Flaps 100%	
	KIAS	KCAS	KIAS	KCAS	KIAS	KCAS
3600 lb - Most FWD C.G.						
0	74	73	70	67	64	61
15	76	74	71	68	64	62
30	80	78	74	72	67	65
45	87	87	79	79	73	72
60	103	103	92	94	85	86
3600 lb - Most AFT C.G.						
0	72	70	69	66	63	60
15	73	71	70	67	64	61
30	77	75	73	71	66	65
45	84	83	79	78	72	72
60	99	99	91	93	85	85

Stall Speeds w/ Ice Accumulation - Serials w/ IPS

• NOTE •

KIAS values may not be accurate at stall.

Bank Angle Deg	STALL SPEEDS AT IDLE			
	Flaps UP		Flaps 50%	
	KIAS	KCAS	KIAS	KCAS
3600 lb - Most FWD C.G.				
0	77	76	72	69
15	79	77	73	70
30	83	82	75	74
45	91	90	82	82
60	107	107	95	98
3600 lb - Most AFT C.G.				
0	77	76	72	69
15	79	77	73	70
30	83	82	75	74
45	91	90	82	82
60	107	107	95	98

Wind Components

Example:

Runway Heading ..... 10°
Wind Direction ..... 60°
Wind Velocity ..... 15 Knots

• NOTE •

The maximum demonstrated crosswind is 21 knots.

Figure 5-1: Wind Components

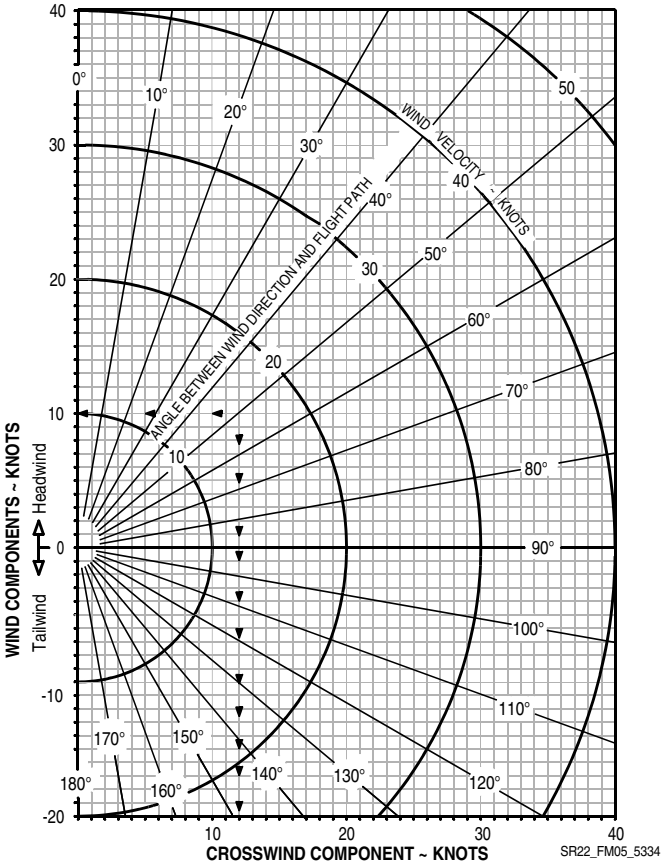

Takeoff Distance

Takeoff Weight 3600 lb (1633 kg)

Conditions:

- Winds ..... Zero
- Runway ..... Dry, Level, Paved
- Flaps 50%
- Air Conditioner ..... OFF
- Power ..... Full Throttle
- Speed Over 50 ft Obstacle ..... 85 KIAS
- Approximate Speed at Liftoff ..... 80 KIAS
- Mixture ..... MAINTAIN FUEL FLOW IN GREEN ARC
  Set prior to brake release for short field takeoff.

The following factors are to be applied to the computed takeoff distance for the noted condition.

Headwind: Subtract 10% for each 12 knots headwind.

Tailwind: Add 10% for each 2 knots tailwind.

Grass runway, dry: Add 15% of the ground roll distance.

Grass runway, wet: Add 30% of the ground roll distance.

Uphill gradient: Add the following percentages to the ground roll table values for every 1% of uphill gradient.

- Sea Level (SL): Add 22%
- 5,000 ft: Add 30%
- 10,000 ft: Add 43%

Downhill gradient: Subtract the following percentages from the ground roll table values for every 1% of downhill gradient.

- Sea Level (SL): Subtract 7%
- 5,000 ft: Subtract 10%
- 10,000: Subtract 14%

Aircraft with Air Conditioning System: Add 100 ft to ground roll distance and 150 ft to distance over 50 ft obstacle if Air Conditioner is ON during takeoff.

Takeoff Weight: 3600 lb (1633 kg)								
Press Alt FT	Distance FT	TEMPERATURE ~°C						
		0	10	20	30	40	50	ISA
SL	Gnd Roll	1352	1461	1574	1692	1814	1941	1517
	Total	1865	2007	2154	2307	2465	2629	2080
1000	Gnd Roll	1443	1559	1680	1805	1936	2071	1595
	Total	1980	2131	2288	2450	2618	2792	2178
2000	Gnd Roll	1540	1664	1793	1927	2066	2210	1677
	Total	2104	2264	2431	2603	2782	2967	2281
3000	Gnd Roll	1645	1777	1914	2058	2206	2361	1764
	Total	2236	2407	2584	2767	2958	3154	2390
4000	Gnd Roll	1757	1898	2045	2198	2357	2522	1856
	Total	2378	2559	2748	2943	3146	3355	2505
5000	Gnd Roll	1878	2029	2186	2350	2520	2696	1954
	Total	2530	2723	2924	3132	3347	3570	2627
6000	Gnd Roll	2008	2170	2338	2513	2694	2883	2058
	Total	2693	2899	3113	3334	3564	3802	2756
7000	Gnd Roll	2149	2322	2501	2688	2883	3084	2168
	Total	2868	3088	3315	3552	3796	4050	2892
8000	Gnd Roll	2300	2485	2678	2878	3086	3302	2284
	Total	3056	3290	3533	3785	4046	4316	3036
9000	Gnd Roll	2463	2661	2868	3082	3305	3536	2408
	Total	3258	3508	3767	4036	4314	4603	3188
10,000	Gnd Roll	2640	2852	3073	3303	3541	3789	2540
	Total	3476	3742	4019	4306	4603	4911	3350

Takeoff Weight 2900 lb (1315 kg)

Conditions:

- Winds ..... Zero
- Runway ..... Dry, Level, Paved
- Flaps 50%
- Air Conditioner ..... OFF
- Power ..... Full Throttle
- Speed Over 50 ft Obstacle ..... 72 KIAS
- Approximate Speed at Liftoff ..... 67 KIAS
- Mixture ..... MAINTAIN FUEL FLOW IN GREEN ARC
  Set prior to brake release for short field takeoff.

The following factors are to be applied to the computed takeoff distance for the noted condition.

Headwind: Subtract 10% for each 12 knots headwind.

Tailwind: Add 10% for each 2 knots tailwind.

Grass runway, dry: Add 15% of the ground roll distance.

Grass runway, wet: Add 30% of the ground roll distance.

Uphill gradient: Add the following percentages to the ground roll table values for every 1% of uphill gradient.

- Sea Level (SL): Add 22%
- 5,000 ft: Add 30%
- 10,000 ft: Add 43%

Downhill gradient: Subtract the following percentages from the ground roll table values for every 1% of downhill gradient.

- Sea Level (SL): Subtract 7%
- 5,000 ft: Subtract 10%
- 10,000: Subtract 14%

Aircraft with Air Conditioning System: Add 100 ft to ground roll distance and 150 ft to distance over 50 ft obstacle if Air Conditioner is ON during takeoff.

Takeoff Distance: 2900 lb (1315 kg)								
Press Alt FT	Distance FT	TEMPERATURE ~°C						
		0	10	20	30	40	50	ISA
SL	Gnd Roll	485	524	564	606	650	695	544
	Total	766	823	882	944	1007	1073	852
1000	Gnd Roll	517	559	602	647	694	742	571
	Total	812	872	935	1000	1068	1138	891
2000	Gnd Roll	552	596	642	690	740	792	601
	Total	861	925	992	1061	1133	1207	932
3000	Gnd Roll	589	637	686	737	791	846	632
	Total	914	982	1053	1126	1202	1281	975
4000	Gnd Roll	630	680	733	788	845	904	665
	Total	970	1043	1118	1196	1277	1360	1021
5000	Gnd Roll	673	727	783	842	903	966	700
	Total	1030	1108	1188	1271	1357	1446	1069
6000	Gnd Roll	720	778	838	900	965	1033	737
	Total	1095	1177	1262	1351	1442	1537	1120
7000	Gnd Roll	770	832	896	963	1033	1105	777
	Total	1164	1252	1343	1437	1534	1634	1174
8000	Gnd Roll	824	890	959	1031	1106	1183	819
	Total	1239	1332	1428	1529	1632	1739	1231
9000	Gnd Roll	883	954	1028	1104	1184	1267	863
	Total	1318	1418	1521	1627	1738	1852	1291
10,000	Gnd Roll	946	1022	1101	1183	1269	1358	910
	Total	1404	1510	1620	1733	1851	1973	1354

Takeoff Climb Gradient

Conditions:

- Power ..... Full Throttle
- Mixture ..... MAINTAIN FUEL FLOW IN GREEN ARC
- Flaps 50%

Weight	Press Alt	Climb Speed	CLIMB GRADIENT - Feet per Nautical Mile					
			TEMPERATURE ~°C					
LB	FT	KIAS	-20	0	20	40	50	ISA
3600	SL	91	1020	879	752	634	579	782
	2000	91	958	823	701	589	537	755
	4000	91	898	770	654	547	496	728
	6000	91	841	719	608	506	458	702
	8000	91	787	671	565	468	422	676
	10000	91	735	625	524	431	387	651
2900	SL	94	1303	1148	1002	864	797	1038
	2000	94	1251	1097	952	815	750	1016
	4000	93	1196	1043	900	765	701	991
	6000	93	1137	986	845	713	650	964
	8000	92	1077	928	790	660	599	935
	10000	92	1015	869	733	607	546	904

Takeoff Rate of Climb

Conditions:

- Power..... Full Throttle
- Mixture..... MAINTAIN FUEL FLOW IN GREEN ARC
- Flaps..... 50%

• NOTE •

Aircraft with Air Conditioning System: Maximum rate of climb performance is reduced by approximately 50 feet per minute. For maximum climb performance the Air Conditioner should be OFF.

Weight	Press Alt	Climb Speed	RATE OF CLIMB - Feet per Minute					
			TEMPERATURE ~°C					
LB	FT	KIAS	-20	0	20	40	50	ISA
3600	SL	91	1462	1314	1166	1019	946	1203
	2000	91	1425	1277	1130	983	910	1196
	4000	91	1388	1240	1093	947	874	1189
	6000	91	1352	1204	1057	910	837	1182
	8000	91	1315	1167	1020	874	801	1175
	10000	91	1278	1131	984	838	765	1168
2900	SL	94	1880	1730	1570	1404	1318	1611
	2000	94	1867	1709	1542	1370	1282	1618
	4000	93	1847	1681	1508	1329	1238	1621
	6000	93	1819	1646	1466	1282	1189	1619
	8000	92	1784	1604	1418	1228	1132	1613
	10000	92	1742	1555	1364	1169	1070	1602

Enroute Climb

Enroute Climb Gradient

Conditions:

- Power ..... Full Throttle
- Mixture ..... Maintain Fuel Flow in GREEN ARC
- Flaps ..... UP

Weight	Press Alt	Climb Speed	CLIMB GRADIENT - Feet per Nautical Mile						
			TEMPERATURE ~°C						
LB	FT	KIAS	-40	-20	0	20	40	50	ISA
3600	SL	120	931	798	679	571	473	427	597
	2000	120	866	740	627	524	430	386	569
	4000	120	804	685	577	480	390	349	542
	6000	120	746	632	530	438	353	313	516
	8000	120	690	583	486	398	317	279	490
	10000	120	638	536	444	360	284	248	466
	12000	120	588	491	404	325	252	218	442
	14000	120	541	449	367	292	222	190	419
	16000	120	497	410	332	260	195	164	397
	18000	120	455	373	299	231	169	139	376
	20000	120	415	337	267	203	144	117	356
	22000	120	390	245	119	9			306
	24000	120	280	147	32				230
	25000	120	229	102					194

Weight	Press Alt	Climb Speed	CLIMB GRADIENT - Feet per Nautical Mile						
			TEMPERATURE ~°C						
LB	FT	KIAS	-40	-20	0	20	40	50	ISA
2900	SL	120	1173	998	856	736	629	579	765
	2000	120	1083	932	806	695	594	546	744
	4000	120	1012	878	763	657	559	511	725
	6000	120	953	831	722	619	521	472	706
	8000	120	903	787	680	578	478	428	685
	10000	120	856	743	636	531	428	377	662
	12000	120	808	695	585	478	371	318	634
	14000	120	757	642	528	416	305	250	601
	16000	120	701	581	463	346	230	173	562
	18000	120	637	512	388	266	146	86	517
	20000	120	564	433	303	176	51		465
	22000	120	482	344	209	77			405
	24000	120	389	245	105				337
	25000	120	339	192	49				300

Enroute Rate Of Climb

Conditions:

- Power ..... Full Throttle
- Mixture ..... Maintain Fuel Flow in GREEN ARC
- Flaps ..... UP

• **NOTE** •

Aircraft with optional Air Conditioning System: Maximum rate of climb performance is reduced by approximately 50 feet per minute if system is ON. For maximum climb performance, the Air Conditioner should be OFF.

Weight	Press Alt	Climb Speed	RATE OF CLIMB - Feet per Minute						
			TEMPERATURE ~°C						
LB	FT	KIAS	-40	-20	0	20	40	50	ISA
3600	SL	120	1635	1465	1298	1133	970	890	1174
	2000	120	1580	1410	1243	1079	917	836	1153
	4000	120	1524	1355	1189	1025	863	783	1131
	6000	120	1469	1301	1135	971	810	730	1110
	8000	120	1414	1246	1081	918	757	677	1089
	10000	120	1359	1191	1027	864	703	624	1067
	12000	120	1304	1137	973	811	650	571	1046
	14000	120	1249	1083	919	757	597	518	1025
	16000	120	1194	1028	865	704	544	465	1003
	18000	120	1140	974	811	650	491	412	982
	20000	120	1085	920	758	597	439	360	961
	22000	120	1064	698	353	27			855
	24000	120	799	438	98				666
	25000	120	668	309					571

Weight	Press Alt	Climb Speed	RATE OF CLIMB - Feet per Minute						
			TEMPERATURE ~°C						
LB	FT	KIAS	-40	-20	0	20	40	50	ISA
2900	SL	120	2045	1822	1630	1456	1289	1206	1498
	2000	120	1964	1768	1594	1427	1262	1179	1502
	4000	120	1908	1731	1566	1401	1233	1146	1508
	6000	120	1869	1704	1540	1370	1193	1100	1515
	8000	120	1841	1677	1508	1329	1137	1037	1517
	10000	120	1815	1646	1466	1271	1060	949	1512
	12000	120	1784	1603	1405	1189	956	833	1496
	14000	120	1742	1541	1320	1079	819	682	1466
	16000	120	1680	1454	1205	934	643	491	1418
	18000	120	1593	1336	1054	749	424	255	1348
	20000	120	1473	1180	860	517	156		1253
	22000	120	1314	979	618	235			1130
	24000	120	1109	729	323				975
	25000	120	988	583	154				884

Enroute Climb Gradient w/ Ice Accumulation - Serials w/ IPS

Conditions:

- Power ..... Full Throttle
- Mixture ..... Maintain Fuel Flow in GREEN ARC
- Flaps ..... UP

Weight	Press Alt	Climb Speed	CLIMB GRADIENT - Feet per Nautical Mile				
			TEMPERATURE ~°C				
LB	FT	KIAS	-20	-10	0	5	ISA
3600	SL	103	728	658	591	560	
	2000	103	662	596	533	502	
	4000	103	600	537	477	448	
	6000	102	541	482	425	397	408
	8000	102	486	429	375	349	380
	10000	102	434	380	329	304	354
	12000	102	385	334	285	262	328
	14000	102	338	290	244	222	304
	16000	101	295	249	206	185	280
	18000	101	254	211	170	150	258
	20000	101	216	175	136	118	237
	22000	100	133	73	17		188
	24000	98	56				133
	25000	97	18				106

Weight	Press Alt	Climb Speed	CLIMB GRADIENT - Feet per Nautical Mile				
			TEMPERATURE ~°C				
LB	FT	KIAS	-20	-10	0	5	ISA
2900	SL	103	978	889	805	765	
	2000	103	895	811	732	694	
	4000	103	817	738	663	626	
	6000	102	743	668	597	563	576
	8000	102	674	603	536	503	542
	10000	102	609	542	478	447	509
	12000	102	548	484	424	395	478
	14000	102	490	430	373	346	448
	16000	101	437	380	326	300	419
	18000	101	386	332	281	257	391
	20000	101	339	288	240	217	365
	22000	100	237	163	93	60	306
	24000	98	144	74	9		240
	25000	97	99	32			208

Enroute Rate Of Climb w/ Ice Accumulation - Serials w/ IPS

Conditions:

- Power ..... Full Throttle
- Mixture ..... Maintain Fuel Flow in GREEN ARC
- Flaps ..... UP

Weight	Press Alt	Climb Speed	RATE OF CLIMB- Feet per Minute				
			TEMPERATURE ~°C				
LB	FT	KIAS	-20	-10	0	5	ISA
3600	SL	103	1166	1075	986	942	
	2000	103	1099	1009	920	876	
	4000	103	1032	943	854	810	
	6000	102	966	876	788	744	761
	8000	102	899	810	722	678	731
	10000	102	833	744	656	613	700
	12000	102	767	678	591	548	669
	14000	102	700	613	526	482	638
	16000	101	635	547	460	417	608
	18000	101	569	482	395	352	577
	20000	101	503	416	330	287	546
	22000	100	319	179	43		445
	24000	98	137				318
	25000	97	46				255

Weight	Press Alt	Climb Speed	RATE OF CLIMB- Feet per Minute				
			TEMPERATURE ~°C				
LB	FT	KIAS	-20	-10	0	5	ISA
2900	SL	103	1556	1446	1337	1283	
	2000	103	1477	1368	1260	1206	
	4000	103	1399	1290	1182	1129	
	6000	102	1321	1213	1105	1052	1073
	8000	102	1244	1136	1029	976	1039
	10000	102	1167	1059	953	900	1006
	12000	102	1090	983	877	825	972
	14000	102	1014	908	802	750	939
	16000	101	938	832	728	676	906
	18000	101	863	758	654	602	873
	20000	101	789	684	580	529	841
	22000	100	569	399	233	152	722
	24000	98	354	186	22		575
	25000	97	247	80			502

Time, Fuel, & Distance to Climb: Full Power

Time, Fuel, & Distance to Climb: Full Power

Conditions:

- Power ..... Full Throttle
- Mixture ..... Maintain Fuel Flow in GREEN ARC
- Weight ..... 3600 LB
- Winds ..... Zero

• NOTE •

Taxi Fuel - Add 1.5 gallon for start, taxi, and takeoff.

Temperature - Add 10% to computed values per each 10 °C above standard.

Press Alt FT	OAT (ISA) °C	Climb Speed KIAS	TIME, FUEL, DISTANCE ~ From Sea Level			
			Time (min)	Fuel (U.S. Gal)	Fuel (lb)	Distance (nm)
SL	15	120	0.0	0.0	0.0	0.0
1000	13	120	0.9	0.5	3.0	1.7
2000	11	120	1.7	1.0	6.0	3.5
3000	9	120	2.6	1.6	9.6	5.4
4000	7	120	3.5	2.1	12.6	7.2
5000	5	120	4.4	2.6	15.6	9.2
6000	3	120	5.3	3.2	19.2	11.1
7000	1	120	6.2	3.7	22.2	13.2
8000	-1	120	7.1	4.3	25.8	15.2
9000	-3	120	8.0	4.8	28.8	17.4
10000	-5	120	9.0	5.4	32.4	19.5
11000	-7	120	9.9	6.0	36.0	21.8
12000	-9	120	10.9	6.5	39.0	24.1
13000	-11	120	11.9	7.1	42.6	26.4
14000	-13	120	12.8	7.7	46.2	28.9
15000	-15	120	13.8	8.3	49.8	31.4
16000	-17	120	14.8	8.9	53.4	33.9
17000	-19	120	15.8	9.5	57.0	36.5
18000	-21	120	16.8	10.1	60.6	39.2

Press Alt FT	OAT (ISA) °C	Climb Speed KIAS	TIME, FUEL, DISTANCE ~ From Sea Level			
			Time (min)	Fuel (U.S. Gal)	Fuel (lb)	Distance (nm)
19000	-23	120	17.9	10.7	64.2	42.0
20000	-25	120	18.9	11.3	67.8	44.9
21000	-27	120	20.0	11.9	71.4	47.8
22000	-29	120	21.2	12.6	75.6	51.1
23000	-31	120	22.5	13.3	79.8	54.9
24000	-33	120	24.0	14.2	85.2	59.4
25000	-35	120	25.7	15.1	90.6	64.6

Time, Fuel, & Distance to Climb: Full Power w/ Ice Accumulation - Serials w/ IPS

Conditions:

- Power ..... Full Throttle
- Mixture ..... Maintain Fuel Flow in GREEN ARC
- Weight ..... 3600 LB
- Winds ..... Zero
- Climb Airspeed ..... Best Rate (Per Table Below)

• NOTE •

Taxi Fuel - Add 1.5 gallon for start, taxi, and takeoff.

Temperature - Add 10% to computed values per each 10 °C above standard.

Press Alt FT	OAT (ISA) °C	Climb Speed KIAS	TIME, FUEL, DISTANCE ~ From Sea Level			
			Time (min)	Fuel (U.S. Gal)	Fuel (lb)	Distance (nm)
SL	15	103	0.0	0.0	0.0	0.0
1000	13	103	1.2	0.7	4.2	2.1
2000	11	103	2.4	1.4	8.4	4.2
3000	9	103	3.6	2.2	13.2	6.4
4000	7	103	4.9	2.9	17.4	8.7
5000	5	103	6.2	3.7	22.2	11.1
6000	3	102	7.5	4.5	27.0	13.6
7000	1	102	8.9	5.3	31.8	16.1
8000	-1	102	10.2	6.1	36.6	18.7
9000	-3	102	11.6	7.0	42.0	21.5
10000	-5	102	13.1	7.8	46.8	24.3
11000	-7	102	14.5	8.7	52.2	27.2
12000	-9	102	16.0	9.6	57.6	30.3
13000	-11	102	17.6	10.5	63.0	33.5
14000	-13	102	19.1	11.5	69.0	36.8
15000	-15	102	20.7	12.4	74.4	40.2
16000	-17	101	22.4	13.4	80.4	43.8
17000	-19	101	24.1	14.4	86.4	47.5
18000	-21	101	25.8	15.5	93.0	51.4

Press Alt FT	OAT (ISA) °C	Climb Speed KIAS	TIME, FUEL, DISTANCE ~ From Sea Level			
			Time (min)	Fuel (U.S. Gal)	Fuel (lb)	Distance (nm)
19000	-23	101	27.6	16.6	99.6	55.5
20000	-25	101	29.5	17.6	105.6	59.7
21000	-27	101	31.4	18.8	112.8	64.3
22000	-29	100	33.7	20.0	120.0	69.7

Time, Fuel, & Distance to Climb: Cruise Climb

Conditions:

- Power ..... 30.5" MAP
- Mixture ..... Target Fuel flow or less
- Weight ..... 3600 LB
- Winds ..... Zero

• NOTE •

Taxi Fuel - Add 1.5 gallon for start, taxi, and takeoff.

Temperature - Add 10% to computed values per each 10 °C above standard.

Press Alt FT	OAT (ISA) °C	Climb Speed KIAS	TIME, FUEL, DISTANCE ~ From Sea Level			
			Time (min)	Fuel (U.S. Gal)	Fuel (lb)	Distance (nm)
SL	15	120	0.0	0.0	0.0	0.0
1000	13	120	1.1	0.3	1.8	2.2
2000	11	120	2.2	0.7	4.2	4.4
3000	9	120	3.3	1.0	6.0	6.7
4000	7	120	4.4	1.3	7.8	9.1
5000	5	120	5.5	1.7	10.2	11.5
6000	3	120	6.7	2.0	12.0	14.0
7000	1	120	7.8	2.4	14.4	16.6
8000	-1	120	9.0	2.7	16.2	19.2
9000	-3	120	10.2	3.1	18.6	21.9
10000	-5	120	11.4	3.5	21.0	24.7
11000	-7	120	12.6	3.8	22.8	27.6
12000	-9	120	13.8	4.2	25.2	30.6
13000	-11	120	15.1	4.6	26.7	33.6
14000	-13	120	16.3	5.0	30.0	36.8
15000	-15	120	17.6	5.4	32.4	40.0
16000	-17	120	18.9	5.8	34.8	43.3
17000	-19	120	20.2	6.2	37.2	46.8
18000	-21	120	21.6	6.6	39.6	50.3
19000	-23	120	22.9	7.0	42.0	53.8
20000	-25	120	24.1	7.4	44.4	57.3

Press Alt FT	OAT (ISA) °C	Climb Speed KIAS	TIME, FUEL, DISTANCE ~ From Sea Level			
			Time (min)	Fuel (U.S. Gal)	Fuel (lb)	Distance (nm)
21000	-27	120	25.4	7.7	46.2	60.7
22000	-29	120	26.7	8.1	48.6	64.5
23000	-31	120	28.2	8.6	51.6	68.7
24000	-33	120	29.7	9.1	54.6	73.3
25000	-35	120	31.5	9.6	57.6	78.6

Cruise Performance

Cruise Performance

Conditions:

- Weight ..... 3400 LB
- Winds ..... Zero

• NOTE •

Subtract 10 KTAS if nose wheel pant and fairing removed. Lower KTAS by 10% if nose and main wheel pants and fairings are removed.

Aircraft with optional Air Conditioning System: Cruise performance is reduced by 2 knots. For maximum cruise performance, the Air Conditioner should be OFF.

Aircraft with optional Enhanced Vision System: Cruise performance is reduced by up to 1 knot.

The values shown in gray may not be achievable for engine temperature management reasons.

CRUISE PERFORMANCE			ISA -30 °C		ISA		ISA +30 °C	
Altitude (ft MSL)	Power (% of 315)	FF (GPH)	TAS (KTAS)	Econ (nm/gal)	TAS (KTAS)	Econ (nm/gal)	TAS (KTAS)	Econ (nm/gal)
2000	85%	18.3	164	9.0	170	9.3	176	9.6
	75%	16.4	157	9.6	162	9.9	167	10.2
	65%	14.6	148	10.2	154	10.5	158	10.8
	55%	12.7	138	10.9	143	11.2	147	11.5
4000	85%	18.3	168	9.1	174	9.5	179	9.8
	75%	16.4	160	9.7	165	10.1	170	10.4
	65%	14.6	151	10.3	156	10.7	161	11.0
	55%	12.7	140	11.0	145	11.4	149	11.8
6000	85%	18.3	171	9.3	177	9.7	183	10.0
	75%	16.4	163	9.9	168	10.2	174	10.6
	65%	14.6	153	10.5	159	10.9	163	11.2
	55%	12.7	143	11.2	147	11.6	152	11.9
8000	85%	18.3	174	9.5	180	9.8	186	10.2
	75%	16.4	166	10.1	171	10.4	177	10.8
	65%	14.6	156	10.7	161	11.1	166	11.4
	55%	12.7	145	11.4	150	11.8	154	12.1

CRUISE PERFORMANCE			ISA -30 °C		ISA		ISA +30 °C	
Altitude (ft MSL)	Power (% of 315)	FF (GPH)	TAS (KTAS)	Econ (nm/gal)	TAS (KTAS)	Econ (nm/gal)	TAS (KTAS)	Econ (nm/gal)
10000	85%	18.3	177	9.7	184	10.0	190	10.4
	75%	16.4	169	10.3	175	10.6	180	11.0
	65%	14.6	159	10.9	164	11.3	169	11.6
	55%	12.7	148	11.6	152	12.0	157	12.3
12000	85%	18.3	181	9.9	187	10.2	193	10.6
	75%	16.4	172	10.4	178	10.8	183	11.2
	65%	14.6	162	11.1	167	11.5	172	11.8
	55%	12.7	150	11.8	155	12.2	159	12.5
14000	85%	18.3	184	10.0	191	10.4	197	10.8
	75%	16.4	175	10.6	181	11.0	187	11.4
	65%	14.6	165	11.3	170	11.7	175	12.0
	55%	12.7	153	12.0	157	12.4	162	12.7
16000	85%	18.3	187	10.2	194	10.6	201	11.0
	75%	16.4	178	10.8	185	11.2	191	11.6
	65%	14.6	167	11.5	173	11.9	179	12.2
	55%	12.7	155	12.2	160	12.6	164	12.9
18000	85%	18.3	191	10.4	198	10.8	205	11.0
	75%	16.4	181	11.0	188	11.4	194	11.8
	65%	14.6	171	11.7	176	12.1	182	12.5
	55%	12.7	158	12.4	162	12.8	167	13.1
20000	85%	18.3	195	10.6	202	11.0	209	11.4
	80%	17.4	190	10.9	197	11.3	204	11.7
	75%	16.4	185	11.2	192	11.7	198	12.0
	65%	14.6	174	11.9	180	12.3	185	12.7
	55%	12.7	160	12.6	165	13.0	169	13.3
22000	85%	18.3	199	10.8	206	11.3	213	11.6
	80%	17.4	194	11.1	201	11.6	208	12.0
	75%	16.4	188	11.5	195	11.9	202	12.3
	65%	14.6	177	12.1	183	12.5	188	12.9
	55%	12.7	163	12.8	168	13.2	172	13.5

CRUISE PERFORMANCE			ISA -30 °C		ISA		ISA +30 °C	
Altitude (ft MSL)	Power (% of 315)	FF (GPH)	TAS (KTAS)	Econ (nm/gal)	TAS (KTAS)	Econ (nm/gal)	TAS (KTAS)	Econ (nm/gal)
24000	85%	18.3	202	11.1	210	11.5	218	11.9
	80%	17.4	197	11.4	205	11.8	212	12.2
	75%	16.4	192	11.7	199	12.1	206	12.5
	65%	14.6	180	12.3	186	12.8	191	13.1
	55%	12.7	165	13.0	170	13.4	174	13.7
25000	85%	18.3	204	11.2	213	11.6	220	12.0
	80%	17.4	199	11.5	207	11.9	214	12.3
	75%	16.4	194	11.8	201	12.2	208	12.6
	65%	14.6	181	12.4	188	12.9	193	13.2
	55%	12.7	166	13.1	171	13.5	176	13.8

Cruise Performance w/ Ice Accumulation - Serials w/ IPS

Conditions:

- Weight ..... 3400 LB
- Winds ..... Zero

• NOTE •

Aircraft with optional Air Conditioning System: Cruise performance is reduced by 2 knots. For maximum cruise performance, the Air Conditioner should be OFF.

Aircraft with optional Enhanced Vision System: Cruise performance is reduced by up to 1 knot.

The values shown in gray may not be achievable for engine temperature management reasons.

CRUISE PERFORMANCE			ISA -30 °C		ISA		ISA +30 °C	
Altitude (ft MSL)	Power (% of 315)	FF (GPH)	TAS (KTAS)	Econ (nm/gal)	TAS (KTAS)	Econ (nm/gal)	TAS (KTAS)	Econ (nm/gal)
2000	85%	18.3	149	8.1				
	75%	16.4	138	8.4				
	65%	14.6	123	8.4				
	55%	12.7	104	8.2				
4000	85%	18.3	151	8.2				
	75%	16.4	139	8.4				
	65%	14.6	123	8.4				
	55%	12.7	104	8.2				
6000	85%	18.3	152	8.3	160	8.7		
	75%	16.4	140	8.5	147	9.0		
	65%	14.6	123	8.5	131	9.0		
	55%	12.7	103	8.1	110	8.7		
8000	85%	18.3	154	8.4	162	8.8		
	75%	16.4	141	8.5	148	9.0		
	65%	14.6	124	8.5	131	9.0		
10000	85%	18.3	156	8.5	164	8.9		
	75%	16.4	141	8.6	149	9.1		
	65%	14.6	124	8.5	131	9.0		

CRUISE PERFORMANCE			ISA -30 °C		ISA		ISA +30 °C	
Altitude (ft MSL)	Power (% of 315)	FF (GPH)	TAS (KTAS)	Econ (nm/gal)	TAS (KTAS)	Econ (nm/gal)	TAS (KTAS)	Econ (nm/gal)
12000	85%	18.3	157	8.6	165	9.0		
	75%	16.4	142	8.6	150	9.1		
	65%	14.6	123	8.5	131	9.0		
14000	85%	18.3	158	8.6	167	9.1		
	75%	16.4	142	8.7	151	9.2		
	65%	14.6	123	8.4	131	9.0		
16000	85%	18.3	165	9.0	168	9.2		
	75%	16.4	150	9.1	151	9.2		
	65%	14.6	131	9.0	131	9.0		
18000	85%	18.3	167	9.1	169	9.2		
	75%	16.4	151	9.2	151	9.2		
	65%	14.6	131	9.0				
20000	85%	18.3	168	9.2	170	9.3	171	9.4
	80%	17.4	160	9.2	161	9.3	162	9.3
	75%	16.4	151	9.2	151	9.2	151	9.2
	65%	14.6	131	8.9				
22000	85%	18.3	169	9.2	171	9.3	172	9.4
	80%	17.4	161	9.3	162	9.3	161	9.3
	75%	16.4	151	9.2	151	9.2	150	9.1

Range / Endurance Profile: Full Power Climb

Range / Endurance Profile: Full Power Climb

Conditions:

- Weight ..... 3600 LB for Climb, Avg 3400 LB for Cruise
- Winds ..... Zero
- Cruise Mixture ..... Target Fuel Flow or less
- Total Fuel ..... 92 Gallons

• NOTE •

Fuel Remaining for Cruise is equal to 92.0 gallons usable, less 1.5 gallons (pre-takeoff fuel consumed), 11 gallons (45 minute IFR reserve at 65% power), and listed volume for fuel consumed in Full Power Climb.

Range is decreased by 5% if nose wheel pant and fairings removed.

Range is decreased by 15% if nose and main wheel pants and fairings removed.

Aircraft with optional Air Conditioning System: Range is decreased by 1% if system in operation. For maximum range, the Air Conditioner should be OFF.

Aircraft with optional Enhanced Vision System: Range is decreased by ½%.

85% POWER							
Press Alt FT	Climb Fuel GAL	Fuel Remaining For Cruise GAL	Airspeed KTAS	Fuel Flow GPH	Endurance HOURS	Range nm	Specific Range nm/GAL
2000	1.0	78.5	170	18.3	4.3	734	9.3
4000	2.1	77.5	174	18.3	4.2	742	9.5
6000	3.2	76.4	177	18.3	4.2	749	9.7
8000	4.3	75.3	180	18.3	4.1	756	9.8
10000	5.4	74.2	184	18.3	4.0	763	10.0
12000	6.5	73.0	187	18.3	4.0	770	10.2
14000	7.7	71.9	191	18.3	3.9	777	10.4
16000	8.9	70.7	194	18.3	3.9	784	10.6

85% POWER (Continued)							
Press Alt FT	Climb Fuel GAL	Fuel Remaining For Cruise GAL	Airspeed KTAS	Fuel Flow GPH	Endurance HOURS	Range nm	Specific Range nm/GAL
18000	10.1	69.4	198	18.3	3.8	791	10.8
20000	11.3	68.2	202	18.3	3.7	798	11.0
22000	12.6	66.9	206	18.3	3.7	805	11.3
24000	14.2	65.4	210	18.3	3.6	810	11.5
25000	15.1	64.4	213	18.3	3.5	812	11.6

75% POWER							
Press Alt FT	Climb Fuel GAL	Fuel Remaining For Cruise GAL	Airspeed KTAS	Fuel Flow GPH	Endurance HOURS	Range nm	Specific Range nm/GAL
2000	1.0	78.5	162	16.4	4.8	779	9.9
4000	2.1	77.5	165	16.4	4.7	786	10.1
6000	3.2	76.4	168	16.4	4.6	793	10.2
8000	4.3	75.3	171	16.4	4.6	800	10.4
10000	5.4	74.2	175	16.4	4.5	807	10.6
12000	6.5	73.0	178	16.4	4.4	814	10.8
14000	7.7	71.9	181	16.4	4.4	821	11.0
16000	8.9	70.7	185	16.4	4.3	827	11.2
18000	10.1	69.4	188	16.4	4.2	834	11.4
20000	11.3	68.2	192	16.4	4.2	841	11.7
22000	12.6	66.9	195	16.4	4.1	847	11.9
24000	14.2	65.4	199	16.4	4.0	852	12.1
25000	15.1	64.4	201	16.4	3.9	853	12.2

65% POWER							
Press Alt FT	Climb Fuel GAL	Fuel Remaining For Cruise GAL	Airspeed KTAS	Fuel Flow GPH	Endurance HOURS	Range nm	Specific Range NM/GAL
2000	1.0	78.5	153	14.6	5.4	828	10.5
4000	2.1	77.5	156	14.6	5.3	835	10.7
6000	3.2	76.4	159	14.6	5.2	842	10.9
8000	4.3	75.3	161	14.6	5.2	848	11.1
10000	5.4	74.2	164	14.6	5.1	855	11.3
12000	6.5	73.0	167	14.6	5.0	861	11.5
14000	7.7	71.9	170	14.6	4.9	868	11.7
16000	8.9	70.7	173	14.6	4.8	874	11.9
18000	10.1	69.4	176	14.6	4.8	879	12.1
20000	11.3	68.2	180	14.6	4.7	885	12.3
22000	12.6	66.9	183	14.6	4.6	890	12.5
24000	14.2	65.4	186	14.6	4.5	893	12.8
25000	15.1	64.4	188	14.6	4.4	894	12.9

55% POWER							
Press Alt FT	Climb Fuel GAL	Fuel Remaining For Cruise GAL	Airspeed KTAS	Fuel Flow GPH	Endurance HOURS	Range nm	Specific Range NM/GAL
2000	1.0	78.5	143	12.7	6.2	884	11.2
4000	2.1	77.5	145	12.7	6.1	890	11.4
6000	3.2	76.4	147	12.7	6.0	896	11.6
8000	4.3	75.3	150	12.7	5.9	902	11.8

55% POWER (Continued)							
Press Alt FT	Climb Fuel GAL	Fuel Remaining For Cruise GAL	Airspeed KTAS	Fuel Flow GPH	Endurance HOURS	Range nm	Specific Range NM/GAL
10000	5.4	74.2	152	12.7	5.8	908	12.0
12000	6.5	73.0	155	12.7	5.7	913	12.2
14000	7.7	71.9	157	12.7	5.6	918	12.4
16000	8.9	70.7	160	12.7	5.6	922	12.6
18000	10.1	69.4	162	12.7	5.5	926	12.8
20000	11.3	68.2	165	12.7	5.4	930	13.0
22000	12.6	66.9	168	12.7	5.3	933	13.2
24000	14.2	65.4	170	12.7	5.1	934	13.4
25000	15.1	64.4	171	12.7	5.1	932	13.5

Range / Endurance Profile: Full Power Climb w/ Ice Accumulation - Serials w/ IPS

Conditions:

- Weight.....3600 LB for Climb, Avg 3400 LB for Cruise
- Winds.....Zero
- Mixture.....Target Fuel Flow or less
- Total Fuel.....92 Gallons

• NOTE •

Fuel Remaining for Cruise in this table is based on climb per Full Power Climb (Rich of Peak Technique) procedure.

Fuel Remaining for Cruise is equal to 92.0 gallons usable, less 1.5 gallons (pre-takeoff fuel consumed), 11 gallons (45 minute IFR reserve at 65% power), and listed volume for fuel consumed in Full Power Climb.

Aircraft with optional Air Conditioning System: Range is decreased by 1% if system in operation. For maximum range, the Air Conditioner should be OFF.

Aircraft with optional Enhanced Vision System: Range is decreased by ½%.

85% POWER							
Press Alt FT	Climb Fuel GAL	Fuel Remaining For Cruise GAL	Airspeed KTAS	Fuel Flow GPH	Endurance HOURS	Range nm	Specific Range nm/GAL
2000	1.4	78.1	152	18.3	4.3	654	8.3
4000	2.9	76.6	154	18.3	4.2	653	8.4
6000	4.5	75.0	155	18.3	4.1	650	8.5
8000	6.1	73.4	157	18.3	4.0	647	8.6
10000	7.8	71.7	158	18.3	3.9	643	8.6
12000	9.6	69.9	159	18.3	3.8	638	8.7
14000	11.5	68.1	160	18.3	3.7	632	8.7
16000	13.4	66.1	161	18.3	3.6	624	8.8
18000	15.5	64.1	161	18.3	3.5	615	8.8

85% POWER (Continued)							
Press Alt FT	Climb Fuel GAL	Fuel Remaining For Cruise GAL	Airspeed KTAS	Fuel Flow GPH	Endurance HOURS	Range nm	Specific Range nm/GAL
20000	17.6	61.9	162	18.3	3.4	606	8.8
22000	20.0	59.5	162	18.3	3.2	595	8.8
24000	23.3	56.3	161	18.3	3.1	579	8.8
25000	25.4	54.1	161	18.3	3.0	569	8.8

75% POWER							
Press Alt FT	Climb Fuel GAL	Fuel Remaining For Cruise GAL	Airspeed KTAS	Fuel Flow GPH	Endurance HOURS	Range nm	Specific Range nm/GAL
2000	1.4	78.1	140	16.4	4.8	667	8.5
4000	2.9	76.6	140	16.4	4.7	663	8.5
6000	4.5	75.0	141	16.4	4.6	658	8.6
8000	6.1	73.4	142	16.4	4.5	652	8.6
10000	7.8	71.7	142	16.4	4.4	645	8.7
12000	9.6	69.9	143	16.4	4.3	637	8.7
14000	11.5	68.1	143	16.4	4.1	627	8.7
16000	13.4	66.1	142	16.4	4.0	617	8.7
18000	15.5	64.1	142	16.4	3.9	605	8.6
20000	17.6	61.9	142	16.4	3.8	593	8.6
22000	20.0	59.5	141	16.4	3.6	579	8.6

65% POWER							
Press Alt FT	Climb Fuel GAL	Fuel Remaining For Cruise GAL	Airspeed KTAS	Fuel Flow GPH	Endurance HOURS	Range nm	Specific Range nm/GAL
2000	1.4	78.1	123	14.6	5.4	665	8.5
4000	2.9	76.6	124	14.6	5.3	658	8.5
6000	4.5	75.0	124	14.6	5.1	649	8.5
8000	6.1	73.4	123	14.6	5.0	639	8.5
10000	7.8	71.7	123	14.6	4.9	629	8.4
12000	9.6	69.9	122	14.6	4.8	617	8.4

55% POWER							
Press Alt FT	Climb Fuel GAL	Fuel Remaining For Cruise GAL	Airspeed KTAS	Fuel Flow GPH	Endurance HOURS	Range nm	Specific Range nm/GAL
2000	1.4	78.1	103	12.7	6.1	639	8.1

Range / Endurance Profile: Cruise Climb

Conditions:

- Weight ..... 3600 LB for Climb, Avg 3400 LB for Cruise
- Winds .....Zero
- Mixture ..... Target Fuel Flow or less
- Total Fuel ..... 92 Gallons

• NOTE •

Fuel Remaining for Cruise in this table is based on AFM Cruise Climb: Lean of Peak Technique; if Full Power Climb: Rich of Peak Technique is performed, use Range/Endurance: Full Power Climb tables.

Fuel Remaining for Cruise is equal to 92.0 gallons usable, less 1.5 gallons (pre-takeoff fuel consumed), 11 gallons (45 minute IFR reserve at 65% power), and listed volume for fuel consumed in Full Power Climb.

Range is decreased by 5% if nose wheel pant and fairings removed.

Range is decreased by 15% if nose and main wheel pants and fairings removed.

Aircraft with optional Air Conditioning System: range is decreased by 1% if system in operation. For maximum range, the Air Conditioner should be OFF.

Aircraft with optional Enhanced Vision System: Range is decreased by ½%.

85% POWER							
Press Alt FT	Climb Fuel GAL	Fuel Remaining For Cruise GAL	Airspeed KTAS	Fuel Flow GPH	Endurance HOURS	Range nm	Specific Range nm/GAL
2000	0.7	78.9	170	18.3	4.3	739	9.3
4000	1.3	78.2	174	18.3	4.3	751	9.5
6000	2.0	77.5	177	18.3	4.2	763	9.7
8000	2.7	76.8	180	18.3	4.2	775	9.8
10000	3.5	76.1	184	18.3	4.2	788	10.0
12000	4.2	75.3	187	18.3	4.1	801	10.2

85% POWER (Continued)							
Press Alt FT	Climb Fuel GAL	Fuel Remaining For Cruise GAL	Airspeed KTAS	Fuel Flow GPH	Endurance HOURS	Range nm	Specific Range nm/GAL
14000	5.0	74.6	191	18.3	4.1	813	10.4
16000	5.8	73.8	194	18.3	4.0	827	10.6
18000	6.6	73.0	198	18.3	4.0	840	10.8
20000	7.4	72.2	202	18.3	3.9	854	11.0
22000	8.1	71.4	206	18.3	3.9	869	11.3
24000	9.1	70.5	210	18.3	3.8	883	11.5
25000	9.6	69.9	213	18.3	3.8	890	11.6

75% POWER							
Press Alt FT	Climb Fuel GAL	Fuel Remaining For Cruise GAL	Airspeed KTAS	Fuel Flow GPH	Endurance HOURS	Range nm	Specific Range nm/GAL
2000	0.7	78.9	162	16.4	4.8	784	9.9
4000	1.3	78.2	165	16.4	4.8	796	10.1
6000	2.0	77.5	168	16.4	4.7	808	10.2
8000	2.7	76.8	171	16.4	4.7	820	10.4
10000	3.5	76.1	175	16.4	4.6	833	10.6
12000	4.2	75.3	178	16.4	4.6	845	10.8
14000	5.0	74.6	181	16.4	4.5	859	11.0
16000	5.8	73.8	185	16.4	4.5	872	11.2
18000	6.6	73.0	188	16.4	4.4	885	11.4
20000	7.4	72.2	192	16.4	4.4	899	11.7
22000	8.1	71.4	195	16.4	4.3	913	11.9

75% POWER (Continued)							
Press Alt FT	Climb Fuel GAL	Fuel Remaining For Cruise GAL	Airspeed KTAS	Fuel Flow GPH	Endurance HOURS	Range nm	Specific Range nm/GAL
24000	9.1	70.5	199	16.4	4.3	927	12.1
25000	9.6	69.9	201	16.4	4.3	934	12.2

65% POWER							
Press Alt FT	Climb Fuel GAL	Fuel Remaining For Cruise GAL	Airspeed KTAS	Fuel Flow GPH	Endurance HOURS	Range nm	Specific Range nm/GAL
2000	0.7	78.9	153	14.6	5.4	833	10.5
4000	1.3	78.2	156	14.6	5.4	845	10.7
6000	2.0	77.5	159	14.6	5.3	857	10.9
8000	2.7	76.8	161	14.6	5.3	869	11.1
10000	3.5	76.1	164	14.6	5.2	882	11.3
12000	4.2	75.3	167	14.6	5.2	894	11.5
14000	5.0	74.6	170	14.6	5.1	907	11.7
16000	5.8	73.8	173	14.6	5.1	920	11.9
18000	6.6	73.0	176	14.6	5.0	933	12.1
20000	7.4	72.2	180	14.6	4.9	946	12.3
22000	8.1	71.4	183	14.6	4.9	959	12.5
24000	9.1	70.5	186	14.6	4.8	972	12.8
25000	9.6	69.9	188	14.6	4.8	978	12.9

55% POWER							
Press Alt FT	Climb Fuel GAL	Fuel Remaining For Cruise GAL	Airspeed KTAS	Fuel Flow GPH	Endurance HOURS	Range nm	Specific Range nm/GAL
2000	0.7	78.9	143	12.7	6.2	889	11.2
4000	1.3	78.2	145	12.7	6.1	900	11.4
6000	2.0	77.5	147	12.7	6.1	912	11.6
8000	2.7	76.8	150	12.7	6.0	924	11.8
10000	3.5	76.1	152	12.7	6.0	936	12.0
12000	4.2	75.3	155	12.7	5.9	948	12.2
14000	5.0	74.6	157	12.7	5.9	959	12.4
16000	5.8	73.8	160	12.7	5.8	971	12.6
18000	6.6	73.0	162	12.7	5.7	982	12.8
20000	7.4	72.2	165	12.7	5.7	994	13.0
22000	8.1	71.4	168	12.7	5.6	1005	13.2
24000	9.1	70.5	170	12.7	5.5	1016	13.4
25000	9.6	69.9	171	12.7	5.5	1021	13.5

Balked Landing

Balked Climb Gradient

Conditions:

- Power ..... Full Throttle
- Mixture ..... MAINTAIN FUEL FLOW IN GREEN ARC
- Flaps 100%

Weight	Press Alt	Climb Speed	CLIMB GRADIENT - Feet per Nautical Mile					
			TEMPERATURE ~°C					
LB	FT	KIAS	-20	0	20	40	50	ISA
3600	SL	79	1111	921	751	596	524	792
	2000	79	1015	835	674	528	459	744
	4000	79	924	754	602	463	398	699
	6000	79	838	678	534	402	341	655
	8000	79	758	606	470	346	287	613
	10000	79	682	539	410	293	237	573
2900	SL	79	1519	1274	1057	861	771	1109
	2000	79	1394	1164	959	775	689	1049
	4000	79	1277	1061	868	694	612	991
	6000	79	1168	965	783	618	541	936
	8000	79	1066	874	703	547	474	883
	10000	79	970	790	628	481	412	832

Balked Landing Rate of Climb

Conditions:

- Power..... Full Throttle
- Mixture..... MAINTAIN FUEL FLOW IN GREEN ARC
- Flaps.....100%

Weight	Press Alt	Climb Speed	RATE OF CLIMB- Feet per Minute					
			TEMPERATURE ~°C					
LB	FT	KIAS	-20	0	20	40	50	ISA
3600	SL	79	1344	1163	986	811	725	1030
	2000	79	1276	1096	919	745	659	998
	4000	79	1208	1028	852	679	594	966
	6000	79	1140	961	786	613	528	934
	8000	79	1072	894	719	548	463	903
	10000	79	1005	827	653	482	397	871
2900	SL	79	1812	1592	1377	1166	1062	1431
	2000	79	1732	1514	1300	1090	986	1396
	4000	79	1653	1436	1224	1014	911	1361
	6000	79	1575	1359	1147	939	836	1327
	8000	79	1497	1282	1072	864	762	1293
	10000	79	1420	1206	996	790	688	1259

Balked Landing Climb Gradient w/ Ice Accumulation - Serials w/ IPS

Conditions:

- Power ..... Full Throttle
- Mixture ..... MAINTAIN FUEL FLOW IN GREEN ARC
- Flaps 50%

Weight	Press Alt	Climb Speed	CLIMB GRADIENT - Feet per Nautical Mile				
			TEMPERATURE ~°C				
LB	FT	KIAS	-20	-10	0	5	ISA
3600	SL	88	796	726	660	628	
	2000	88	740	673	610	579	
	4000	88	686	622	562	533	
	6000	88	635	574	517	489	500
	8000	88	586	529	474	448	479
	10000	88	540	486	434	408	459
2900	SL	88	1087	999	915	874	
	2000	88	1015	931	851	813	
	4000	88	947	867	791	755	
	6000	88	883	807	735	700	713
	8000	88	822	750	681	648	687
	10000	88	764	696	630	599	662

Balked Landing Rate of Climb w/ Ice Accumulation - Serials w/ IPS

Conditions:

- Power..... Full Throttle
- Mixture..... MAINTAIN FUEL FLOW IN GREEN ARC
- Flaps..... 50%

Weight	Press Alt	Climb Speed	RATE OF CLIMB- Feet per Minute				
			TEMPERATURE ~°C				
LB	FT	KIAS	-20	-10	0	5	ISA
3600	SL	88	1104	1028	953	915	
	2000	88	1065	989	914	876	
	4000	88	1025	950	875	837	
	6000	88	986	911	836	798	813
	8000	88	947	872	797	759	804
	10000	88	908	832	758	720	795
2900	SL	88	1496	1405	1313	1268	
	2000	88	1452	1361	1270	1224	
	4000	88	1408	1317	1226	1181	
	6000	88	1364	1274	1183	1138	1156
	8000	88	1321	1231	1140	1095	1149
	10000	88	1278	1188	1098	1053	1143

Landing Distance

Landing Distance - 100% Flaps

Conditions:

- Winds ..... Zero
- Runway ..... Dry, Level, Paved
- Weight ..... 3600 lb (1633 kg)
- Power ..... Idle
- Speed Over Obstacle ..... 79 KIAS

The following factors are to be applied to the computed landing distance for the noted condition.

Headwind: Subtract 10% for each 13 knots headwind.

Tailwind: Add 10% for each 2 knots tailwind.

Grass Runway, Dry: Add 20% of the ground roll distance.

Grass Runway, Wet: Add 60% of the ground roll distance.

Uphill gradient: Subtract 9% from the ground roll table values for every 1% of uphill gradient.

Downhill gradient: Add 27% to the ground roll table values for every 1% of downhill gradient.

Landing Distance Table - Flaps 100%

Press Alt FT	Distance FT	TEMPERATURE ~°C						
		0	10	20	30	40	50	ISA
SL	Gnd Roll	1117	1158	1198	1239	1280	1321	1178
	Total	2447	2505	2565	2625	2685	2747	2535
1000	Gnd Roll	1158	1200	1243	1285	1327	1370	1213
	Total	2506	2567	2630	2693	2757	2821	2585
2000	Gnd Roll	1201	1245	1289	1333	1377	1421	1250
	Total	2568	2633	2699	2765	2832	2900	2636
3000	Gnd Roll	1246	1292	1337	1383	1428	1474	1287
	Total	2635	2702	2771	2841	2911	2983	2691
4000	Gnd Roll	1293	1340	1388	1435	1482	1530	1326
	Total	2705	2776	2848	2922	2996	3070	2748
5000	Gnd Roll	1342	1391	1440	1489	1539	1588	1367
	Total	2779	2854	2930	3007	3085	3163	2808
6000	Gnd Roll	1393	1444	1495	1546	1598	1649	1409
	Total	2857	2936	3016	3097	3179	3261	2871
7000	Gnd Roll	1447	1500	1553	1606	1659	1712	1453
	Total	2941	3024	3108	3193	3279	3365	2937
8000	Gnd Roll	1503	1558	1613	1668	1724	1779	1499
	Total	3029	3116	3205	3294	3384	3475	3006
9000	Gnd Roll	1562	1619	1677	1734	1791	1848	1546
	Total	3122	3214	3307	3401	3496	3592	3079
10,000	Gnd Roll	1624	1683	1743	1802	1862	1921	1595
	Total	3221	3318	3416	3515	3614	3715	3155

Landing Distance - 50% Flaps

Conditions:

- Winds ..... Zero
- Runway ..... Dry, Level, Paved
- Weight ..... 3600 lb (1633 kg)
- Power ..... Idle
- Speed Over Obstacle ..... 87 KIAS

The following factors are to be applied to the computed landing distance for the noted condition.

Headwind: Subtract 10% for each 13 knots headwind.

Tailwind: Add 10% for each 2 knots tailwind.

Grass Runway, Dry: Add 20% of the ground roll distance.

Grass Runway, Wet: Add 60% of the ground roll distance.

Uphill gradient: Subtract 9% from the ground roll table values for every 1% of uphill gradient.

Downhill gradient: Add 27% to the ground roll table values for every 1% of downhill gradient.

Landing Distance Table - Flaps 50%

Press Alt FT	Distance FT	TEMPERATURE ~°C						
		0	10	20	30	40	50	ISA
SL	Gnd Roll	1166	1209	1251	1294	1337	1379	1230
	Total	2681	2745	2810	2875	2942	3010	2777
1000	Gnd Roll	1209	1253	1298	1342	1386	1430	1267
	Total	2745	2813	2881	2950	3020	3091	2833
2000	Gnd Roll	1254	1300	1346	1392	1438	1484	1305
	Total	2814	2885	2957	3029	3103	3178	2892
3000	Gnd Roll	1301	1349	1396	1444	1491	1539	1344
	Total	2886	2961	3037	3113	3191	3269	2954
4000	Gnd Roll	1350	1399	1449	1498	1548	1597	1385
	Total	2963	3042	3121	3202	3283	3366	3019
5000	Gnd Roll	1401	1453	1504	1555	1607	1658	1427
	Total	3045	3127	3211	3296	3382	3468	3087
6000	Gnd Roll	1455	1508	1561	1615	1668	1721	1472
	Total	3131	3218	3306	3395	3485	3576	3158
7000	Gnd Roll	1511	1566	1622	1677	1732	1788	1517
	Total	3223	3314	3407	3501	3595	3691	3233
8000	Gnd Roll	1570	1627	1685	1742	1800	1857	1565
	Total	3320	3416	3514	3612	3712	3812	3312
9000	Gnd Roll	1631	1691	1751	1810	1870	1930	1614
	Total	3423	3524	3627	3731	3835	3941	3395
10,000	Gnd Roll	1695	1758	1820	1882	1944	2006	1666
	Total	3532	3639	3747	3856	3966	4077	3481

Landing Distance - Flaps UP

Conditions:

- Winds ..... Zero
- Runway ..... Dry, Level, Paved
- Weight ..... 3600 lb (1633 kg)
- Power ..... Idle
- Speed Over Obstacle ..... 94 KIAS

The following factors are to be applied to the computed landing distance for the noted condition.

Headwind: Subtract 10% for each 13 knots headwind.

Tailwind: Add 10% for each 2 knots tailwind.

Grass Runway, Dry: Add 20% of the ground roll distance.

Grass Runway, Wet: Add 60% of the ground roll distance.

Uphill gradient: Subtract 9% from the ground roll table values for every 1% of uphill gradient.

Downhill gradient: Add 27% to the ground roll table values for every 1% of downhill gradient.

Landing Distance Table - Flaps UP

Press Alt FT	Distance FT	TEMPERATURE ~°C						
		0	10	20	30	40	50	ISA
SL	Gnd Roll	1365	1415	1465	1515	1565	1615	1440
	Total	3165	3241	3319	3398	3478	3558	3280
1000	Gnd Roll	1415	1467	1519	1571	1623	1675	1483
	Total	3242	3323	3404	3487	3571	3656	3347
2000	Gnd Roll	1468	1522	1576	1629	1683	1737	1527
	Total	3324	3409	3495	3582	3670	3759	3418
3000	Gnd Roll	1523	1579	1635	1690	1746	1802	1574
	Total	3411	3500	3590	3682	3775	3868	3491
4000	Gnd Roll	1581	1638	1696	1754	1812	1870	1621
	Total	3503	3597	3692	3788	3885	3984	3569
5000	Gnd Roll	1641	1701	1761	1821	1881	1941	1671
	Total	3600	3699	3799	3900	4003	4106	3650
6000	Gnd Roll	1703	1766	1828	1890	1953	2015	1723
	Total	3703	3807	3913	4019	4127	4236	3736
7000	Gnd Roll	1769	1834	1899	1963	2028	2093	1776
	Total	3813	3922	4033	4145	4258	4373	3825
8000	Gnd Roll	1838	1905	1972	2040	2107	2174	1832
	Total	3929	4044	4161	4279	4398	4518	3919
9000	Gnd Roll	1910	1980	2049	2119	2189	2259	1890
	Total	4052	4173	4296	4420	4545	4671	4018
10,000	Gnd Roll	1985	2058	2130	2203	2276	2348	1950
	Total	4183	4310	4439	4569	4701	4833	4122

Landing Distance - 50% w/ Ice Accumulation - Serials w/ IPS

Conditions:

- Winds ..... Zero
- Runway ..... Dry, Level, Paved
- Weight ..... 3600 lb (1633 kg)
- Power 50%
- Flaps ..... Idle
- Speed Over Obstacle ..... 88 KIAS

The following factors are to be applied to the computed takeoff distance for the noted condition.

Headwind: Subtract 10% for each 13 knots headwind.

Tailwind: Add 10% for each 2 knots tailwind up to 10 knots.

Grass Runway, Dry: Add 20% of the ground roll distance.

Grass Runway, Wet: Add 60% of the ground roll distance.

Uphill gradient: Subtract 9% from the ground roll table values for every 1% of uphill gradient.

Downhill gradient: Add 27% to the ground roll table values for every 1% of downhill gradient.

• NOTE •

Shaded values indicate associated balked landing climb gradient less than 3.3%

Normal landings will be completed with the flaps set to 50%.

Landing Distance Table - Flaps 50% w/ Ice Accumulation - Serials w/ IPS

Press Alt FT	Distance FT	TEMPERATURE ~°C				
		-20	-10	0	5	ISA
SL	Gnd Roll	1356	1409	1463	1489	
	Total	2833	2908	2984	3022	
1000	Gnd Roll	1406	1461	1517	1544	
	Total	2903	2981	3061	3101	
2000	Gnd Roll	1458	1516	1573	1602	
	Total	2977	3059	3143	3185	
3000	Gnd Roll	1513	1572	1632	1662	
	Total	3055	3142	3229	3274	
4000	Gnd Roll	1570	1632	1694	1725	
	Total	3138	3229	3321	3367	
5000	Gnd Roll	1629	1694	1758	1790	1791
	Total	3225	3321	3418	3466	3467
6000	Gnd Roll	1692	1758	1825	1859	1846
	Total	3318	3418	3520	3571	3552
7000	Gnd Roll	1757	1826	1896	1930	1903
	Total	3416	3522	3628	3682	3641
8000	Gnd Roll	1825	1897	1969	2005	1963
	Total	3520	3631	3743	3800	3733
9000	Gnd Roll	1896	1971	2046	2084	2025
	Total	3630	3746	3864	3924	3831
10,000	Gnd Roll	1971	2049	2127	2166	2089
	Total	3746	3869	3993	4055	3933

Intentionally Left Blank

Section 6: Weight and Balance

Table of Contents

Introduction 3
Weight and Balance Record 3
Weight and Balance Data 3
Loading Instructions 4
Weight and Balance Loading Form 5
Loading Data 7
Serials w/ IPS: Deicing Fluid Moment Values 8
Moment Values 10
Weight & Balance Record 11
Equipment List 11

Intentionally Left Blank

Introduction

This section describes the procedure for calculating the weight and moment for various operations. A comprehensive list of all equipment available for this airplane is included at the back of this section.

It should be noted that specific information regarding the weight, arm, moment, and installed equipment for this airplane as delivered from the factory can be found at the back of this section.

It is the responsibility of the pilot to ensure that the airplane is loaded properly and that all changes to the basic empty weight and center of gravity are recorded.

Figure 6-1: Airplane Weighing

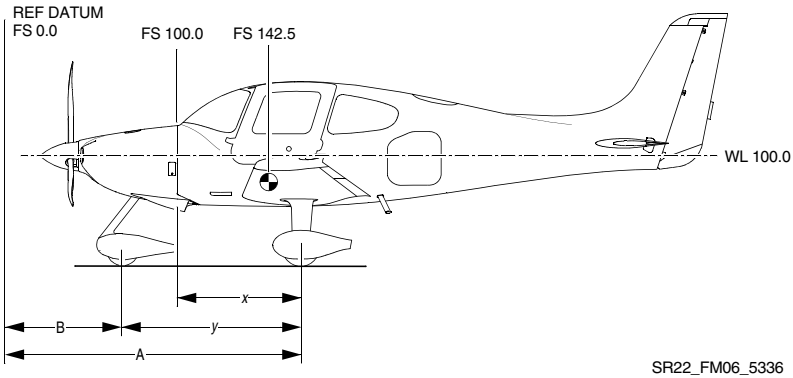

Basic empty weight, moment, and center of gravity are provided in inches aft of datum, where 0 inches datum is 100.0 inches forward of the cabin firewall.

• **NOTE** •

Refer to AMM Chapter 8: Leveling & Weighing for instructions.

Function information on displays do not supersede information in AFM. In the event of conflict, the AFM takes precedence.

Weight and Balance Record

Weight and Balance Data

Refer to “As-Delivered” Weight and Balance Data.

Loading Instructions

It is the responsibility of the pilot to ensure that the airplane is properly loaded and operated within the prescribed weight and center of gravity limits. The following information enables the pilot to calculate the total weight and moment for the loading. The calculated moment is then compared to the Moment Limits chart or table (Figure 6-4) for a determination of proper loading.

Airplane loading determinations are calculated using the Weight & Balance Loading Form (Figure 6-2), the Loading Data chart and table (Figure 6-3), and the Moment Limits chart and table (Figure 6-4).

1. Basic Empty Weight – Enter the current Basic Empty Weight and Moment from the Weight & Balance Record (Figure 6-5).
2. Front Seat Occupants – Enter the total weight and moment/1000 for the front seat occupants from the Loading Data (Figure 6-3).
3. Rear Seat Occupants – Enter the total weight and moment/1000 for the rear seat occupants from the Loading Data (Figure 6-3).
4. Baggage – Enter weight and moment for the baggage from the Loading Data (Figure 6-3).

• NOTE •

If desired, subtotal the weights and moment/1000 from steps 1 through 4. This is the Zero Fuel Condition. It includes all useful load items excluding fuel.

5. Fuel Loading – Enter the weight and moment of usable fuel loaded on the airplane from the Loading Data (Figure 6-3).

• NOTE •

Subtotal the weight and moment/1000. This is the Ramp Condition or the weight and moment of the aircraft before taxi.

6. Fuel for start, taxi, and run-up – This value is pre-entered on the form. Normally, fuel used for start, taxi, and run-up is approximately 9 pounds at an average moment/1000 of 1.394.
7. Takeoff Condition – Subtract the weight and moment/1000 for step 6 (start, taxi, and run-up) from the Ramp Condition values (step 5) to determine the Takeoff Condition weight and moment/1000.

• NOTE •

The total weight at takeoff must not exceed the maximum weight limit of 3600 pounds. The total moment/1000 must not be above the maximum or below the minimum moment/1000 for the Takeoff Condition Weight as determined from the Moment Limits chart or table (Figure 6-4).

Weight and Balance Loading Form

• NOTE •

The Takeoff Condition Weight must not exceed 3600 lb.

The Takeoff Condition Moment must be within the Minimum Moment to Maximum Moment range at the Takeoff Condition Weight. (Refer to Moment Values).

RELATED TABLE/FIGURE:

For Center of Gravity Envelope, refer to Section 2: Limitations.

Serial Num: .....

Date: .....

Reg. Num: .....

Initials: .....

Figure 6-2: Weight & Balance Loading Form

Item	Description	Weight LB	Moment/1000
1.	Basic Empty Weight Includes unusable fuel & full oil		
2.	Front Seat Occupants Pilot & Passenger (total)		
3.	Rear Seat Occupants		
4.	Baggage Area 130 lb maximum		
5.	Serials w/ IPS: Deicing Fluid Loading 8.5 Gallon @ 9.2 lb/gal. Maximum		
6.	Zero Fuel Condition Weight Sub total item 1 thru 5 3400 lb maximum		
7.	Fuel Loading 92 Gallon @ 6.0 lb/gal. Maximum		
8.	Ramp Condition Weight Sub total items 6 and 7		
9.	Fuel for start, taxi, and run-up Normally 9 lb at average moment of 1394		

Item	Description	Weight LB	Moment/1000
10.	Takeoff Condition Weight Subtract item 9 from item 8		

Loading Data

Use the following chart or table to determine the moment/1000 for fuel and payload items to complete the Loading Form.

Figure 6-3: Loading Chart

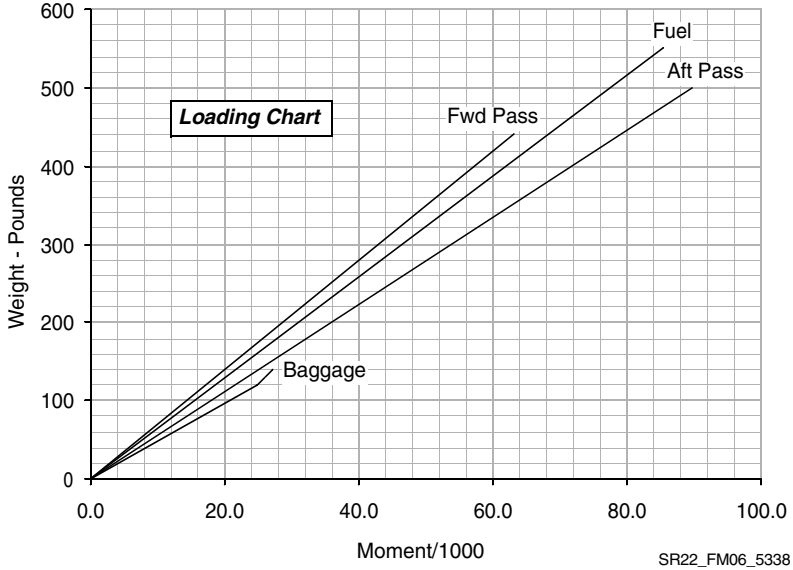

Weight LB	Fwd Pass FS 143.5	Aft Pass FS 180.0	Baggage FS 208.0	Fuel FS 154.9	Weight LB	Fwd Pass FS 143.5	Aft Pass FS 180.0	Fuel FS 154.9
20	2.9	3.6	4.2	3.1	300	43.1	54.0	46.5
40	5.7	7.2	8.3	6.2	320	45.9	57.6	49.6
60	8.6	10.8	12.5	9.3	340	48.8	61.2	52.7
80	11.5	14.4	16.6	12.4	360	51.7	64.8	55.8
100	14.4	18.0	20.8	15.5	380	54.5	68.4	58.9
120	17.2	21.6	25.0	18.6	400	57.4	72.0	62.0
140	20.1	25.2	27.04*	21.7	420	60.3	75.6	65.1
160	23.0	28.8		24.8	440	63.1	79.2	68.2
180	25.8	32.4		27.9	460		82.8	71.3
200	28.7	36.0		31.0	480		86.4	74.4
220	31.6	39.6		34.1	500		90.0	77.5
240	34.4	43.2		37.2	520			80.5
260	37.3	46.8		40.3	552**			85.5
280	40.2	50.4		43.4				
*130 lb Maximum					**92 U. S. Gallons Usable			

Serials w/ IPS: Deicing Fluid Moment Values

Use the following table to determine the Moment/1000 for deicing fluid to complete the Loading Form in (Figure 6-2).

- Total fluid tank capacity is 8.5 gallons (32 L).
- Deicing fluid weight is 9.2 pounds per gallon.

*Minimum Dispatch Fluid Qty

**Usable Tank Capacity

Gallons	Weight LB	Mom/1000@ Tank (FS148.0)
0.1	0.9	0.14
0.2	1.8	0.27
0.3	2.8	0.41
0.4	3.7	0.54
0.5	4.6	0.68
0.6	5.5	0.82
0.7	6.4	0.95
0.8	7.4	1.09
0.9	8.3	1.23
1.0	9.2	1.36
1.1	10.1	1.50
1.2	11.0	1.63
1.3	12.0	1.77
1.4	12.9	1.91
1.5	13.8	2.04
1.6	14.7	2.18
1.7	15.6	2.31
1.8	16.6	2.45
1.9	17.5	2.59
2.0	18.4	2.72
2.1	19.3	2.86
2.2	20.2	3.00

Gallons	Weight LB	Mom/1000@ Tank (FS148.0)
2.3	21.2	3.13
2.4	22.1	3.27
2.5	23.0	3.40
2.6	23.9	3.54
2.7	24.8	3.68
2.8	25.8	3.81
2.9	26.7	3.95
3.0	27.6	4.08
3.1	28.5	4.22
3.2	29.4	4.36
3.3	30.4	4.49
3.4	31.3	4.63
3.5	32.2	4.77
3.6	33.1	4.90
3.7	34.0	5.04
3.8	35.0	5.17
3.9	35.9	5.31
4.0	36.8	5.45
4.1	37.7	5.58
4.2	38.6	5.72
4.3	39.6	5.85
4.4	40.5	5.99

Gallons	Weight LB	Mom/1000@ Tank (FS148.0)
4.5	41.4	6.13
4.6	42.3	6.26
4.7	43.2	6.40
4.8	44.2	6.54
4.9	45.1	6.67
5.0*	46.0	6.81
5.1	46.9	6.94
5.2	47.8	7.08
5.3	48.8	7.22
5.4	49.7	7.35
5.5	50.6	7.49
5.6	51.5	7.62
5.7	52.4	7.76
5.8	53.4	7.90
5.9	54.3	8.03
6.0	55.2	8.17
6.1	56.1	8.31
6.2	57.0	8.44
6.3	58.0	8.58
6.4	58.9	8.71
6.5	59.8	8.85
6.6	60.7	8.99
6.7	61.6	9.12
6.8	62.6	9.26
6.9	63.5	9.40
7.0	64.4	9.53
7.1	65.3	9.67
7.2	66.2	9.80
7.3	67.2	9.94

Gallons	Weight LB	Mom/1000@ Tank (FS148.0)
7.4	68.1	10.08
7.5	69.0	10.21
7.6	69.9	10.35
7.7	70.8	10.48
7.8	71.8	10.62
7.9	72.7	10.76
8.0**	73.6	10.89
8.1	74.5	11.03
8.2	75.4	11.17
8.3	76.4	11.30
8.4	77.3	11.44
8.5	78.2	11.57

Moment Values

Use the following chart or table to determine if the weight and moment from the completed Weight and Balance Loading Form (Figure 6-2) are within limits.

Figure 6-4: Moment Values Chart

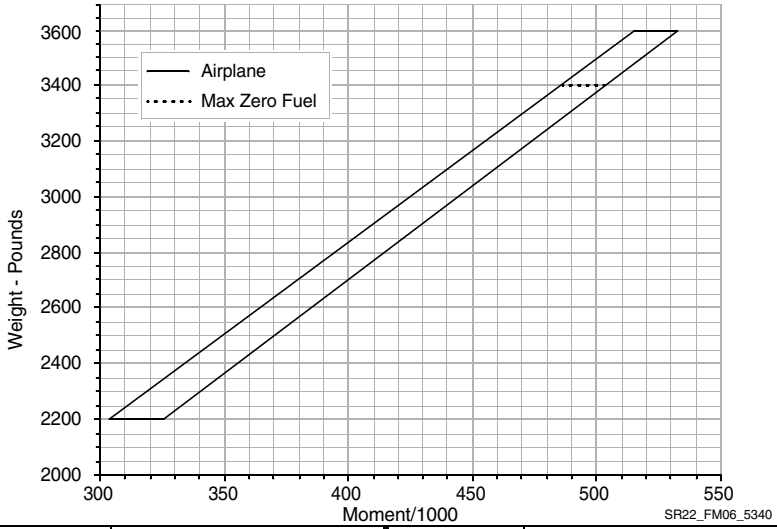

Weight LB	Moment/1000 Minimum	Moment/1000 Maximum	Weight LB	Moment/1000 Minimum	Moment/1000 Maximum
2200	304	326	2950	414	437
2250	311	333	3000	422	444
2300	318	341	3050	430	452
2350	325	348	3100	438	459
2400	332	356	3150	445	467
2450	340	363	3200	453	474
2500	347	370	3250	461	481
2550	354	378	3300	469	489
2600	361	385	3350	477	496
2650	368	393	*3400	484	504
2700	375	400	3450	494	511
2750	383	407	3500	501	519
2800	391	415	3550	508	526
2850	399	422	3600	515	533
2900	407	430			

*NOTE: Maximum zero fuel weight.

Weight & Balance Record

Use this form to maintain a continuous history of changes and modifications to airplane structure or equipment affecting weight and balance:

Figure 6-5: Weight & Balance Record Form

Serial Num:				Reg. Num:			Page __ of __	
Date	Item No.		Description of Article or Modification	Weight Change Added (+) or Removed (-)			Running Basic Empty Weight	
	In	Out		WT LB	ARM IN.	MOM/ 1000	WT LB	MOM/ 1000
			As-Delivered					

Equipment List

This list will be determined after the final equipment has been installed in the aircraft.

Intentionally Left Blank

Section 7: Systems Description

Table of Contents

• NOTE •

Content for Section 7: Systems Description is located in the Pilot's Information Manual (PIM).

Intentionally Left Blank

Section 8: Handling and Servicing

Table of Contents

Introduction 3
Operator's Publications 3
Service Publications 3
Obtaining Publications 4
Airplane Records and Certificates 4
Airworthiness Directives 5
Airplane Inspection Periods 5
Annual Inspection 5
100-Hour Inspection 6
Cirrus Progressive Inspection Program 6
Ground Handling 7
Application of External Power 7
Towing 8
Taxiing 9
Parking 9
Tie Down 11
Leveling 11
Jacking 11
Safe Return Autoland Runway Recovery 12
Post-Autoland Aircraft Recovery 12
Servicing 13
Landing Gear Servicing 13
Brake Servicing 13
Brake Maintenance 13
Tire Inflation 14
Propeller Servicing 14
Engine Oil Servicing 14
Fuel System Servicing 15
Battery Service 18
Oxygen System Servicing 18
Key Fob Battery Replacement 19
ELT Servicing 19
Serials w/ IPS: IPS Storage and Service 21
Cleaning Exterior Surfaces 22
Painted Surfaces 22
Exterior Windshield and Windows 23

Enhanced Vision System Sensor Lenses (Optional) 23
Engine Compartment 24
Landing Gear 25
Recommended Exterior Cleaning Products 25
Care of Graphics 26
Cleaning Interior Surfaces 30
Interior Windshield and Windows 30
Instrument Panel and Electronic Display Screens 31
Headliner and Trim Panels 31
Leather Upholstery and Seats 32
Carpets 32

Introduction

This section provides general guidelines for handling, servicing, and maintaining your aircraft. In order to ensure continued safe and efficient operation of your airplane, keep in contact with your Authorized Cirrus Service Center to obtain the latest information pertaining to your aircraft.

Operator's Publications

The FAA Approved Airplane Flight Manual is provided at delivery. Additional or replacement copies may be obtained from Cirrus.

Service Publications

The following service publications are available for purchase from Cirrus:

- Airplane Maintenance Manual (AMM) – Maintenance Manual divided into chapters as specified by GAMA and ATA covering inspection, servicing, maintenance, troubleshooting, and repair of the airplane structure, systems, and wiring. Revision Service for this manual is also available. A current copy of the AMM is provided at delivery.
- Wiring Manual – Manual covering maintenance, troubleshooting, testing, and repair of the airplane electrical wiring.
- Illustrated Parts Catalog (IPC) – Catalog prepared to aid operators and mechanics to identify and procure replacement airplane parts.
- CAPS Component Maintenance Manual (CMM) – Maintenance Manual with Illustrated Parts List prepared to enable an authorized Cirrus CAPS technician to restore the system to a functional condition.
- Engine Operators and Maintenance Manual – Cirrus provides a Continental Motors Engine Operator's and Maintenance Manual at the time of delivery. Engine and engine accessory overhaul manuals can be obtained from the original equipment manufacturer.
- Avionics Component Operator and Maintenance Manuals – Cirrus provides all available operator's manuals at the time of delivery. Maintenance manuals, if available, may be obtained from the original equipment manufacturer.

Cirrus publishes Service Bulletins, Service Advisories, and Service Information Letters. Copies can be obtained from Cirrus at www.cirrusaircraft.com.

- Service Bulletins – are of special importance. When a Service Bulletin affecting your plane is published, comply with it promptly.
- Service Advisory Notices – are used to notify you of optional Service Bulletins, supplier Service Bulletins or Service Information Letters affecting your airplane, and maintenance data or corrections not

requiring a Service Bulletin. Pay careful attention to the Service Advisory information.

Obtaining Publications

Airplane Flight Manuals and aircraft service publications can be obtained from Cirrus at www.cirrusaircraft.com.

Airplane Records and Certificates

The Federal Aviation Administration (FAA) requires that certain data, certificates, and licenses be displayed or carried aboard the airplane at all times. Additionally, other documents must be made available upon request. The mnemonic acronym "ARROW" is often used to help remember the required documents.

RELATED TABLE/FIGURE:
Refer to "Table 1: Required Documents".

• NOTE •

Owners of aircraft not registered in the United States should check with the registering authority for additional requirements.

Table 1: Required Documents

Required Documents		Note
A	Airworthiness Certificate FAA Form 8100-2	Must be displayed at all times.
R	Registration Certificate FAA Form 8050-3	Must be in the aircraft for all operations.
R	Radio Station License FCC Form 556	Required only for flight operations outside the United States.
O	Operating Instructions	FAA Approved Airplane Flight Manual and associated aircraft placards fulfill this requirement.
W	Weight & Balance Data	Included in FAA Approved Airplane Flight Manual. Data must include current empty weight, CG, and equipment list.

Other Documents	Note
Airplane Logbook	Must be made available upon request.
Engine Logbook	Must be made available upon request.
Pilot's Checklist	Available in cockpit at all times.

Airworthiness Directives

The Federal Aviation Administration (FAA) publishes Airworthiness Directives (ADs) that apply to specific aircraft and aircraft appliances or accessories. ADs are mandatory changes and must be complied with within a time limit set forth in the AD. Operators should periodically check with Cirrus Service Centers or A&P mechanic to verify receipt of the latest issued AD for their airplane.

Airplane Inspection Periods

• NOTE •

14 CFR 1.1 defines time in service, with respect to maintenance time records, as "the time from the moment an aircraft leaves the surface of the earth until it touches it at the next point of landing."

The Flight hours meter is displayed on the Status & Info synoptic page and should be used for tracking maintenance time intervals.

The inspection items specified in the Annual/100 Inspection have been determined by the average aircraft use rate of the typical owner. Non-commercially operated aircraft that are flown significantly more than 100 hours per year should consider additional inspections commensurate with the hours flown. 100-Hour Inspection or enrollment in a Progressive Inspection Program should be considered in addition to the normally required Annual Inspection. The Annual Inspection interval may also be shortened to accommodate high utilization rate.

Annual Inspection

Unless enrolled in a Progressive Inspection Program, The U.S. Federal Aviation Regulations require all civil aircraft must undergo a thorough Annual Inspection every twelve calendar months. Annual Inspections are due on the last day of the twelfth month following the last Annual Inspection. For example: If an Annual Inspection was performed on 19 November 2015, the next Annual Inspection will be due 30 November 2016. Annual Inspections must be accomplished regardless of the number of hours flown

the previous year and can only be performed by a licensed Airframe and Powerplant (A&P) mechanic holding an Inspection Authorization (IA). Annual inspections can only be performed by facilities approved by Cirrus. The inspection is listed, in detail, in Chapter 5 of the Airplane Maintenance Manual.

100-Hour Inspection

If the airplane is used to carry persons or provide flight instruction for hire, the Federal Aviation Regulations require that the airplane undergo a 100-Hour Inspection every 100 hours of flight operation in addition to the Annual Inspection requirement. The scope of the 100-Hour Inspection is identical to the Annual Inspection, except that it can be accomplished by a licensed A&P mechanic. The 100-hour interval may be exceeded by not more than 10 flight hours in order to reach a place where the inspection can be accomplished. Any flight hours used to reach an inspection station must be deducted from the next 100-Hour Inspection interval. The inspection is listed, in detail, in Chapter 5 of the Airplane Maintenance Manual.

Cirrus Progressive Inspection Program

In lieu of the above requirements, an airplane may be inspected using a Progressive Inspection Program in accordance with the Federal Aviation Regulation Part 91.409(d).

The Cirrus Progressive Inspection Program provides for the complete inspection of the airplane utilizing a five-phase cyclic inspection program.

400 flight hours: A total of eight inspections are accomplished over the course of 400 flight hours, with an inspection occurring every 50 flight hours.

800 flight hours: A total of sixteen inspections are accomplished over the course of 800 flight hours, with an inspection occurring every 50 flight hours.

The inspection items to be covered in the Progressive Inspection are very similar to the Annual Inspection items. The Progressive Inspection will accomplish a full Inspection of the airplane at 400 (or 800) flight hours or at 12 calendar months.

The inspections are listed, in detail, in Chapter 5 of the Airplane Maintenance Manual.

Ground Handling

Application of External Power

An external power receptacle, located just aft of the cowl on the left side of the airplane, permits the use of an external power unit for cold weather starting and maintenance procedures.

• WARNING •

If external power will be used to start engine, keep yourself, others, and power unit cables well clear of the propeller rotation plane.

To Apply External Power to Airplane

• CAUTION •

In accordance with the manufacturer's recommendation, external power should not be used to start the airplane with a dead battery or to charge a dead or weak battery in the airplane. The battery must be removed from the airplane and battery maintenance performed in accordance with the appropriate AMM procedures.

1. Ensure external power unit is regulated to 28 VDC.
2. Verify BAT 1 and BAT 2 switches are set to OFF.
3. Plug external power unit into the receptacle.
4. Set BAT 1 switch to ON. 28 VDC from the external power unit will energize the main distribution and essential distribution buses. The airplane may now be started or electrical equipment operated.

• CAUTION •

If maintenance on avionics systems is to be performed, it is recommended that external power be used.

To Remove External Power from Airplane

1. If battery power is no longer required, set BAT 1 switch 'off.'
2. Pull external power unit plug.

Towing

The airplane may be moved on the ground by the use of the nose wheel steering bar that is stowed in the rear baggage compartment or by power equipment that will not damage or excessively strain the nose gear assembly. The steering bar is engaged by inserting it into lugs just forward of the nose wheel axle.

• CAUTION •

While pushing the aircraft backward, the tow bar must be installed to keep the nose wheel from turning abruptly.

Do not use the vertical or horizontal control surfaces or stabilizers to move the airplane. If a tow bar is not available, use the wing roots as push points.

Do not push or pull on control surfaces or propeller to maneuver the airplane.

Do not tow the airplane when the main gear is obstructed with mud or snow.

If the airplane is to be towed by vehicle, do not turn the nose wheel more than 90 degrees either side of center or structural damage to the nose gear could result.

To Tow Airplane

• CAUTION •

Be especially cognizant of hangar door clearances.

1. Refer to Section 1: General, "Airplane Three View" for turning radius clearances.
2. Insert tow bar into the lugs just forward of the nose wheel axle.
3. Release parking brake.
4. Remove chocks.
5. Move airplane to desired location.
6. Set parking brake in accordance with Parking procedure in this section.
7. Install chocks.
8. Remove tow bar.

To obtain a minimum radius turn during ground handling, the airplane may be rotated around either main landing gear by pressing down on the fuselage just forward of the horizontal stabilizer to raise the nose wheel off the ground.

Taxiing

Before attempting to taxi the airplane, ground personnel should be instructed and authorized by the owner to taxi the airplane. Instruction should include engine starting and shutdown procedures in addition to taxi and steering techniques.

• CAUTION •

Verify that taxi and propeller wash areas are clear before beginning taxi.

Do not operate the engine at high RPM when running up or taxiing over ground containing loose stones, gravel, or any loose material that may cause damage to the propeller blades.

Taxi with minimum power needed for forward movement. Excessive braking may result in overheated or damaged brakes.

To Taxi Airplane

1. Remove chocks.
2. Start engine in accordance with Engine Start procedure.
3. Release parking brake.
4. Advance throttle to initiate taxi. Immediately after initiating taxi, apply the brakes to determine their effectiveness. To ascertain steering effectiveness during taxi, use differential braking to make slight turns.

• CAUTION •

Observe wing clearance when taxiing near buildings or other stationary objects. If possible, station an observer outside the airplane.

Avoid holes and ruts when taxiing over uneven ground.

5. Taxi airplane to desired location.
6. Shut down engine in accordance with Shutdown procedure.
7. Set parking brake in accordance with Parking procedure in this section.
8. Install chocks.
9. In gusty or stormy weather, moor airplane.

Parking

The airplane should be parked to protect the airplane from weather and to prevent it from becoming a hazard to other aircraft. The parking brake may release or exert excessive pressure because of heat buildup after heavy braking or during wide temperature swings. Therefore, if the airplane is to be left unattended or is to be left overnight, chock and tie down the airplane.

If the airplane will be parked for 30 days or more, pull the CONV SYS 1 and CONV SYS 2 circuit breakers to prevent excessive discharge from battery 1.

To Park Airplane

1. Position airplane on level surface and headed into the wind.
2. Retract flaps.

• CAUTION •

Do not set parking brake during cold weather, when accumulated moisture may freeze brakes, or when brakes are overheated.

3. Set parking brake by first applying brake pressure using the toe brakes and then pulling the PARK BRAKE knob aft.
4. Install chocks.
5. In gusty or stormy weather, tie down airplane in accordance with Tie Down procedure in this section.
6. Install a pitot probe cover.
7. Ensure cabin and baggage doors are locked when the airplane is left unattended.

Tie Down

The airplane should be moored for immovability, security, and protection. FAA Advisory Circular AC 20-35C, Tie-down Sense, contains additional information regarding preparation for severe weather, tie down, and related information.

To Tie Down (Moor) Airplane

1. Position airplane on level surface and headed into the wind.
2. Retract flaps.

• CAUTION •

Do not set parking brake during cold weather, when accumulated moisture may freeze brakes, or when brakes are overheated.

3. Set parking brake in accordance with Parking procedure in this section.
4. Install chocks.
5. Secure tie-down ropes to the wing tie-down rings and to the tail ring at approximately 45-degree angles to the ground.

• CAUTION •

Anchor points for wing tiedowns should not be more than 18 feet apart to prevent eyebolt damage in heavy winds.

Use bowline knots, square knots, or the midshipman's hitch (also known as a taut line hitch or half-hitch). Do not use plain slip-knots.

Regardless of which tie-down style is employed, ensure that the lines are taut and any slack is eliminated.

Leveling

Refer to AMM Chapter 8: Leveling & Weighing, Weighing the Airplane procedures for instructions and illustration.

Jacking

Refer to AMM Chapter 7: Lifting & Shoring, Jacking the Airplane procedures for list of required tools and for illustration.

Safe Return Autoland Runway Recovery

• NOTE •

Brakes will remain set after emergency automatic landing and after power is removed from aircraft.

Perform the following steps to move the aircraft away from the runway after an emergency automatic landing. Brake reset must be accomplished any time the automatic braking system is activated as part of Safe Return Autoland. Brake reset is not intended for use during flight.

Post-Autoland Aircraft Recovery

1. Evacuate passengers from aircraft.
2. Chock or secure aircraft.
3. Turn off engine ignition by rotating engine knob to OFF position
4. Press red AP DISC button on control yoke.
5. Press green brake reset button located to the right of parking brake for 5 seconds.
6. Set BAT 1, BAT 2, ALT 1, and ALT 2 switches to OFF position.
7. Tow airplane in accordance with Towing procedure in this section.
8. Perform Hard/Overweight Landing procedure in accordance with AMM Chapter 5-50: Unscheduled Maintenance Checks.

Servicing

Landing Gear Servicing

The main landing gear wheel assemblies use 15 x 6.00 x 6 tubeless tires. The nose wheel assembly uses a 5.00 x 5 tubeless tire.

Always keep tires inflated to the rated pressure to obtain optimum performance and maximum service. The landing gear struts do not require servicing. With the exception of replenishing brake fluid, wheel and brake servicing must be accomplished in accordance with AMM procedures.

Brake Servicing

To Replenish Brake Fluid

The brake system is filled with MIL-PRF-87257 hydraulic brake fluid. The fluid level should be checked at every oil change and at the annual/100-hour inspection, replenishing the system when necessary. The brake reservoir is located on the right side of the battery support frame.

• **NOTE** •

If the entire system must be refilled, refer to AMM Chapter 12: Servicing, Brake Fluid Replenishing.

1. Install chocks.
2. Release parking brake.
3. Remove top engine cowling to gain access to hydraulic fluid reservoir.
4. Clean reservoir cap and area around cap before opening reservoir cap.
5. Remove cap and add MIL-PRF-87257 hydraulic fluid as necessary to fill reservoir.
6. Install cap, inspect area for leaks, and then install and secure engine cowling.

Brake Maintenance

The brake assemblies and linings should be checked at every oil change (50 hours) for general condition, evidence of overheating, and deterioration.

The aircraft should not be operated with overheated, damaged, or leaking brakes. Conditions include, but are not limited to:

- Leaking brake fluid at the caliper. This can be observed by checking for evidence of fluid on the ground or deposited on the underside of the wheel fairing. Wipe the underside of the fairing with a clean, white cloth and inspect for red colored fluid residue.
- Overheated components, indicated by discoloration or warping of the disk rotor. Excessive heat can cause the caliper components to discolor or cause yellowing of the part identification label.

Tire Inflation

For maximum service from the tires, keep them inflated to the proper pressure. When checking tire pressure, examine the tires for wear, cuts, nicks, bruises and excessive wear.

To Inflate Tires

1. Open access doors on wheel pants to gain access to valve stems. It may be necessary to move airplane to get valve stem aligned with the access hole.
2. Remove valve stem cap and verify tire pressure with a dial-type tire pressure gauge.
3. Inflate nose tire to 30 - 35 psi (207 - 241 kPa) and main wheel tires to 60 - 65 psi (414 - 448kPa).
4. Replace valve stem cap and close access doors.

Propeller Servicing

The spinner and backing plate should be cleaned and inspected for cracks frequently. Before each flight, the propeller should be inspected for nicks, scratches, and corrosion. If found, they should be repaired as soon as possible by a rated mechanic, since a nick or scratch causes an area of increased stress which can lead to serious cracks or the loss of a propeller tip.

Propeller blades are painted with a durable specialized coating that is resistant to abrasion. If this coating becomes eroded, it is necessary to repaint the blades to provide proper erosion protection. Painting should be performed by an authorized propeller repair station.

It is permissible to perform a blade touch-up with aerosol paint in accordance with the appropriate revision of the Hartzell Propeller Owner's Manual (p/n 145).

Engine Oil Servicing

The oil capacity of the engine is 8 quarts.

It is recommended that the oil be changed every 50 hours and sooner under unfavorable operating conditions.

Engine Break-In: For first 25 hours of operation or until oil consumption stabilizes, use straight mineral oil conforming to MIL-C-6529. If engine oil must be added to the factory installed oil, add only MIL-C-6529 straight mineral oil.

• NOTE •

Mineral oil conforming to MIL-C-6529 Type II contains a corrosion preventive additive and must not be used for more than 25 hours or six months, whichever occurs first. If oil consumption has not stabilized in this time, drain the mineral oil, replace the oil filter and replace the discarded mineral oil with SAE J1966 aviation oil.

After Engine Break-In: Use only oils conforming to SAE J 1899 (Ashless Dispersant Lubrication Oil).

Refer to Section 2, Powerplant Limitations, for approved oil grades.

An oil filler cap and dipstick are located at the left rear of the engine and are accessible through an access door on the top left side of the engine cowling.

• CAUTION •

The engine should not be operated with less than six quarts of oil. Seven quarts (dipstick indication) is recommended for extended flights.

To Check and Add Oil

1. Open access door on upper left-hand side of cowl. Pull dipstick and verify oil level.
2. If oil level is below 6 quarts (5.7 liters), remove filler cap and add oil through filler as required to reach 6 - 8 quarts (5.7 - 7.6 liters).
3. Verify oil level and install dipstick and filler cap.
4. Close and secure access panel.

Fuel System Servicing

Observe all safety precautions required when handling gasoline. Fuel fillers are located on the forward slope of the wing. Each wing holds a maximum of 46.0 U.S. gallons. When using less than the standard 92.0 gallon capacity, fuel should be distributed equally between each side.

• WARNING •

During fueling, have a fire extinguisher available.
Ground fuel nozzle and fuel truck to airplane exhaust pipe and ground fuel truck or cart to suitable earth ground.
Do not fill tank within 100 feet (30.5 meters) of any energized electrical equipment capable of producing a spark.
Smoking or open flames are prohibited within 100 ft (30.5 m) of airplane or refuel vehicle.
Do not operate radios or electrical equipment during refuel operations.
Do not operate any electrical switches.

To Refuel Airplane

• CAUTION •

Aviation grade 100 LL (blue) or 100 (green) fuel is the minimum octane approved for use in this airplane.

1. Place fire extinguisher near fuel tank being filled.
2. Connect ground wire from refuel nozzle to airplane exhaust, from airplane exhaust to fuel truck or cart, and from fuel truck or cart to a suitable earth ground.
3. Place rubber protective cover over wing around fuel filler.

• NOTE •

Do not permit fuel nozzle to come in contact with bottom of fuel tanks. Keep fuel tanks at least half full at all times to minimize condensation and moisture accumulation in tanks. In extremely humid areas, the fuel supply should be checked frequently and drained of condensation to prevent possible distribution problems.

4. Remove fuel filler cap and fuel airplane to desired level.

• NOTE •

If fuel is going to be added to only one tank, the tank being serviced should be filled to the same level as the opposite tank. This will aid in keeping fuel loads balanced.

Refer to Section 2: Limitations, "Fuel" for maximum fuel imbalance information.

5. Remove nozzle, install filler cap, and remove protective cover.
6. Repeat refuel procedure for opposite wing.
7. Remove ground wires.
8. Remove fire extinguisher.

Fuel Filtration Screen/Element

After the first 25 hours of operation, then every 50-hours or as conditions dictate, the fuel filtration screen in the gascolator must be cleaned. After cleaning, a small amount of grease applied to the gascolator bowl gasket will facilitate reassembly.

Refer to AMM Chapter 28: Fuel, Fuel Screen/Element servicing procedures.

Fuel Contamination and Sampling

Typically, fuel contamination results from foreign material such as water, dirt, rust, and fungal or bacterial growth. Additionally, chemicals and additives that are incompatible with fuel or fuel system components are also a source of fuel contamination. To ensure that the proper grade of fuel is used and that contamination is not present, the fuel must be sampled prior to each flight.

Each fuel system drain must be sampled by draining a cupful of fuel into a clear sample cup. Fuel drains are provided for the fuel gascolator, wing tanks, and collector tank drains. The gascolator drain exits the lower engine cowl just forward of the firewall near the airplane centerline. Fuel tank and collector tank drains are located at the low spot in the respective tank.

If sampling reveals contamination, the gascolator and tank drains must be sampled again repeatedly until all contamination is removed. It is helpful to gently rock the wings and lower the tail slightly to move contaminates to the drain points for sampling. If after repeated samplings (three or more), evidence of significant contamination remains, do not fly the airplane until a mechanic is consulted, the fuel system is drained and purged, and the source of contamination is determined and corrected.

If sampling reveals the airplane has been serviced with an improper fuel grade, do not fly the airplane until the fuel system is drained and refueled with an approved fuel grade.

To help reduce the occurrence of contaminated fuel coming from the supplier or fixed based operator, pilots should ensure that the fuel supply has been checked for contamination and that the fuel is properly filtered. Also, between flights, the fuel tanks should be kept as full as operational conditions permit to reduce condensation on the inside of fuel tanks. In extremely humid areas, the fuel supply should be checked frequently and drained of condensation to prevent possible contamination.

De-Fueling

The bulk of the fuel may be drained from the wing fuel tanks by the use of a siphon hose placed in the cell or tank through the filler neck. The remainder of the fuel may be drained by opening the drain valves. Use the same precautions as when refueling airplane. Refer to the AMM for specific procedures.

• **NOTE** •

Refer to AMM Chapter 12: Servicing, Airplane De-Fueling procedures for more information.

Battery Service

The aircraft is delivered with a maintenance-free, rechargeable, sealed, lithium-ion primary battery. Battery #1 is mounted to the bottom right side of the instrument panel and access is gained by removing the lower kick panel. The battery vent is connected to a tube that vents gases overboard.

If Battery #1 is completely discharged, the battery must be recharged within 60 days. Failure to recharge the battery will result in permanent depletion and the battery may need to be replaced. Refer to "To Recharge Battery # 1".

Battery #2 is a maintenance-free, rechargeable, sealed, lead acid battery. Mounted in the empennage just aft of bulkhead 222, there is no need to check the specific gravity of the electrolyte or add water to these batteries during their service life. Refer to AMM Chapter 5: Time Limits And Maintenance Checks, Overhaul and Replacement Schedule.

The external power receptacle is located on the left side of the fuselage just aft of the firewall. Refer to AMM Chapter 24: Electrical Power, External Power for servicing procedures.

To Recharge Battery # 1

1. Turn BAT 1 and BAT 2 switches OFF.
2. Connect appropriately rated ground power.
3. Turn BAT 1 switch ON.
4. Navigate to the Electrical page on the MFD.
5. Verify BAT 1 state of charge begins to increase.
6. Continuing charging battery until state of charge is greater than 75%.
7. Disconnect ground power.

Oxygen System Servicing

• CAUTION •

To preclude the possibility of fire by spontaneous combustion, oil, grease, paint, hydraulic fluid, and other flammable material should be kept away from oxygen equipment.

Service the oxygen system per the appropriate revision of the Precise Flight Instructions for Continued Airworthiness for the Cirrus SR22/SR22T Built-In Oxygen System, STC number SA01708SE, document number 102NPMAN0003.

Key Fob Battery Replacement

Serials w/ Convenience Lighting:

If the key fob does not function properly at normal range, the battery should be replaced. To replace the key fob battery:

To Replace Key Fob Battery

1. Using a thin flat object, pry the top and bottom halves of the key fob apart.
2. Remove and replace the battery with a new CR2032, or equivalent, 3-volt battery. Install the new battery with the positive side (+) facing up, away from the circuit board.
3. Press the top and bottom halves of the key fob back together.

ELT Servicing

The ELT batteries must be inspected in accordance with the Airplane Maintenance Manual, 5-20 - Scheduled Maintenance Checks.

The ELT batteries must be replaced upon reaching the date stamped on the batteries, after an inadvertent activation of unknown duration, or whenever the batteries have been in use for one cumulative hour.

Inspection / Test

After setting transmitter switch to TEST position, the ELT automatically enters a self-test mode. The self-test transmits a 406 MHz test coded pulse that monitors certain system functions before shutting off. The test pulse is ignored by any satellite that receives the signal, but the ELT uses this pulse to check output power and frequency. Other parameters of the ELT are checked and a set of error codes is generated if a problem is found. The error codes are indicated by a series of pulses on the transmitter LED, the Remote Switch and Control Panel Indicator (RCPI) LED, and alert buzzer.

• **NOTE** •

FAA regulations require that transmitter tests only be done during the first 5 minutes of each hour and must not last for more than 3 audio sweeps (1.5 seconds). If you are at a location where there is an FAA control tower or other monitoring facility, notify the facility before beginning the tests. Never activate the ELT while airborne for any reason.

Operators may wish to use a low quality AM broadcast receiver to determine if energy is being transmitted from the antenna. When the antenna of the radio (tuning dial on any setting) is held about 6 inches from the activated ELT antenna, the ELT aural tone will be heard on the AM broadcast receiver. This is not a measured check, but it does provide confidence that the antenna is radiating sufficient power to aid search and rescue. The aircraft's VHF

receiver, tuned to 121.5 MHz, may also be used. This receiver, however, is more sensitive and could pick up a weak signal even if the radiating ELT's antenna is disconnected. Therefore, it does not check the integrity of the ELT system or provide the same level of confidence as does an AM radio.

To Service ELT

1. Tune aircraft receiver to 121.5 MHz.
2. Push switch lever to TEST position for approximately 1 second, and then release.
3. Results of the test are displayed by a series of indications (flash codes), where the local LED, remote switch LED and buzzer(s) activate for ½ second ON, followed by ½ second OFF. Error codes, indicated by multiple flashes separated by 1-second periods, will begin to display after approximately 1 second.
4. Flash Codes displayed with the associated conditions are as follows:
   a. 1-Flash: Indicates that the system is operational and that no error conditions were found.
   b. 2-Flashes: Not used. If displayed, correct condition before further flight.
   c. 3-Flashes: Not used. If displayed, correct condition before further flight.
   d. 4-Flashes: Indicates low output power. If displayed, correct condition before further flight.
   e. 5-Flashes: Indicates no position data present. If displayed, correct condition before further flight.

   • **NOTE** •

   BAT1 must be powered on to provide position data to the ELT.

   f. 6-Flashes: Indicates G-switch loop is not present. If displayed, correct condition before further flight.
   g. 7-Flashes: Battery check. If displayed, correct condition before further flight.
   h. 8-Flashes: Indicates programming data missing. If displayed, correct condition before further flight.

Serials w/ IPS: IPS Storage and Service

• CAUTION •

During long periods of non-use, the porous panel membranes may dry out which could cause uneven fluid flow during subsequent operation. Perform the Pre-Flight Inspection every 30 days to keep porous panel membranes wetted.

Use only approved deicing fluid. See Section 2, Limitations. To prevent fluid contamination, maintain a clean, dedicated measuring container and ensure mouth of fluid container is clean before dispensing. Secure the filler cap immediately after filling.

Certain solvents may damage the panel membrane. Use only soap and water, isopropyl alcohol, or ethyl alcohol to clean panels. Do not wax leading edge porous panels.

Storage

To prepare the Ice Protection System for flyable storage, fill the deicing fluid tanks and perform the Pre-Flight Inspection to verify evidence of ice protection fluid along the length of all porous panels. The tanks may then be drained until the next service interval (30 days minimum) or operation of the system is desired.

To Service IPS

Deicing Fluid Tank

The deicing fluid tanks are serviced through filler caps in the upper wing skins. Each tank is individually drained and vented by lock-open/lock-close valves in the lower wing skins.

Porous Panels

Periodically clean porous panels with soap and water using a clean, lint-free cloth. Isopropyl alcohol may be used to remove oil or grease.

Metering Pump Priming

If air entered the system due to the fluid tank(s) running dry during system operation, it may require several cycles of the windshield/priming pump to prime the metering pumps.

In the event that the metering pumps cannot prime themselves, the windshield/priming pump may be cycled, 3s ON, 3s OFF, to draw fluid from the tank to prime the metering pump manifolds and to remove any entrapped air between the metering pumps and the fluid tank(s).

Cleaning Exterior Surfaces

• CAUTION •

Airplane serials with Ice Protection System: Do not wax leading edge porous panels. Refer to Section 9: Log of Supplements of this manual for instructions and limitations for airplanes equipped with the Ice Protection System.

Prior to cleaning, place the airplane in a shaded area to allow the surfaces to cool.

The airplane should be washed with a mild soap and water. Harsh abrasives or alkaline soaps or detergents could make scratches on painted or plastic surfaces or could cause corrosion of metal. Cover static ports and other areas where cleaning solution could cause damage. Be sure to remove the static port covers before flight.

Painted Surfaces

• NOTE •

Any good silicone-free automotive wax may be used to preserve painted surfaces. Soft cleaning cloths or a chamois should be used to prevent scratches when cleaning or polishing. A heavier coating of wax on the leading surfaces will reduce the abrasion problems in these areas.

To Clean Painted Surfaces

1. Flush away loose dirt with water.
2. Apply cleaning solution with a soft cloth, a sponge, or a soft bristle brush.
3. To remove exhaust stains, allow the solution to remain on the surface longer.
4. To remove stubborn oil and grease, use a cloth dampened with naphtha.
5. Rinse all surfaces thoroughly.

Exterior Windshield and Windows

Before cleaning an acrylic window, rinse away all dirt particles before applying cloth or chamois. Never rub dry acrylic. Dull or scratched window coverings may be polished using a special acrylic polishing paste.

• CAUTION •

Clean acrylic windows with a solvent-free, non-abrasive, antistatic acrylic cleaner. Do not use gasoline, alcohol, benzene, carbon tetrachloride, thinner, acetone, or glass window cleaning sprays.

Use only a non-abrasive cotton cloth or genuine chamois to clean acrylic windows. Paper towel or newspaper are highly abrasive and will cause hairline scratches.

To Clean Exterior Windshield and Windows

1. Remove grease or oil using a soft cloth saturated with kerosene then rinse with clean, fresh water.

• NOTE •

Wiping with a circular motion can cause glare rings. Use an up and down wiping motion on the windshield in the direction of the airflow to prevent this.

To prevent scratching from dirt that has accumulated on the cloth, fold cloth to expose a clean area after each pass.

2. Using a moist cloth or chamois, gently wipe the windows clean of all contaminants.
3. Apply acrylic cleaner to one area at a time, then wipe away with a soft, cotton cloth.
4. Dry the windows using a dry non-abrasive cotton cloth or chamois.

Enhanced Vision System Sensor Lenses (Optional)

The Enhanced Vision System Sensor is located on the underside of the LH wing. The three sensor lenses are made of Germanium. In contrast to visible light energy, infrared energy typically passes through dirt on the lens. As such, the Sensor lenses require only occasional cleaning.

• CAUTION •

If an EVS Sensor lens breaks, use gloves and masks when handling broken Germanium lens material.

Do not use abrasive cleansers or cleaning pads on the Germanium lens. Abrasive cleaning can damage the sensor lens coating.

Do not use any cleansers containing ammonia. Ammonia will remove the sensor lens coating.

To Clean EVS Sensor Lenses

1. Apply mild liquid soap and water or isopropyl alcohol, then wipe away with a soft, cotton cloth.
2. Dry the sensor lenses using a dry non-abrasive cotton cloth.

Engine Compartment

Before cleaning the engine compartment, place a strip of tape on the magneto vents to prevent any solvent from entering these units.

The engine exterior and compartment may be cleaned with a dry cleaning solvent, MIL-PRF-680 Type II.

To Clean Engine Compartment

1. Place a large pan under the engine to catch waste.
2. Remove induction air filter and seal off induction system inlet.
3. With the engine cowling removed, spray or brush the engine with solvent or a mixture of solvent and degreaser. In order to remove especially heavy dirt and grease deposits, it may be necessary to brush areas that were sprayed.

   • CAUTION •

   Do not spray solvent into the alternator, vacuum pump, starter, or induction air intakes.

4. Allow the solvent to remain on the engine from 5 to 10 minutes. Then rinse engine clean with additional solvent and allow it to dry.

   • CAUTION •

   Do not operate the engine until excess solvent has evaporated or otherwise been removed.

5. Remove the protective tape from the magnetos.
6. Open induction system air inlet and install filter.
7. Lubricate in accordance with AMM Chapter 12: Servicing.

Landing Gear

Before cleaning the landing gear, place a plastic cover or similar material over the wheel and brake assembly.

To Clean Landing Gear

1. Place a pan under the gear to catch waste.
2. Spray or brush the gear area with solvent or a mixture of solvent and degreaser, as desired. Where heavy grease and dirt deposits have collected, it may be necessary to brush areas that were sprayed, in order to clean them.
3. Allow the solvent to remain on the gear from five to ten minutes. Then rinse the gear with additional solvent and allow to dry.
4. Remove the cover from the wheel and remove the catch pan.
5. Lubricate the gear in accordance with AMM Chapter 12: Servicing.

Recommended Exterior Cleaning Products

Cleaning Application	Cleaning Product	Supplier
Painted Exterior	Pure Carnauba Wax	Any Source
	Mothers California Gold Pure Carnauba Wax	Mothers Polish
	RejeX High Gloss Protective Finish	Corrosion Technologies
	WX/Block System	Wings and Wheels
	AeroShell Flight Jacket Plexicoat	Aeroshell
Painted Exterior and Landing Gear	XL-100 Heavy-Duty Cleaner/Degreaser	Buckeye International
Engine Compartment	Stoddard Solvent PD-680 Type ll	Any Source

Cleaning Application	Cleaning Product	Supplier
Exterior Windshield and Windows	Kerosene	Any Source
	Klear-To-Land	D.W. Davies & Co
	Plastic and Glass Cleaner	Prist Aerospace
	Acrylic Polish & Sealant	LP Aero Plastics

Care of Graphics

Graphics require care similar to any fine paint finish. Use high quality products designed specifically for use on automobile finishes. Use products in accordance with the manufacturer's instructions.

Graphics, like paint, are degraded by prolonged exposure to sun and atmospheric pollutants. Store aircraft in a hangar, under a cloth cover, or shaded area whenever possible. Protect aircraft from dew and rain which may contain acidic pollutants (commonly found in large metropolitan areas).

• CAUTION •

If graphics start to discolor or turn brown as a result of exposure to acidic pollution, immediately have a professional remove the graphic from the aircraft to avoid staining the underlying paint.

To Wash and Clean Graphics

Wash graphics whenever the aircraft appears dirty. Contaminants allowed to remain on the exterior may be more difficult to remove.

1. Rinse off as much dirt and grit as possible with a spray of water.
2. Clean graphic with a wet, non-abrasive detergent such as 3M™ Car Wash Soap 39000, Meguiar's NXT Generation® Car Wash, or Deep Crystal® Car Wash, and a soft, clean cloth or sponge.
3. Rinse thoroughly with clean water.
4. To reduce water spotting, immediately use a silicone squeegee to remove water.
5. Dry with a clean microfiber cloth.

To Pressure Wash Graphics

Although hand washing is preferred, pressure washing may be used when necessary to remove dirt and contaminants. Pressure washing must be performed in accordance with the following procedure:

1. Ensure water pressure is less than 2000 psi (14 MPa).
2. Ensure water temperature is less than 180 °F (82 °C).
3. Use a spray nozzle with a 40° wide angle spray pattern.

• CAUTION •

Holding the nozzle of a pressure washer at an angle less than 90° to the graphic may lift the edges of the graphic.

4. Keep the spray nozzle perpendicular to the graphic, and at a distance of at least 1 foot (30 cm).
5. To reduce water spotting, immediately use a silicone squeegee to remove water.
6. Dry with a clean microfiber cloth.

To Spot Clean Difficult Contaminants

Difficult contaminants such as bugs, bird droppings, or tree sap may require spot cleaning.

• CAUTION •

To prevent scratching the graphic, refrain from rough scrubbing and the use of abrasive tools.

1. Soften contaminants by soaking with hot, soapy water for several minutes.
2. Rinse thoroughly with clean water.
3. To reduce water spotting, immediately use a silicone squeegee to remove water.
4. Dry with a clean microfiber cloth.

• CAUTION •

Initially test cleaning products on an inconspicuous area of the graphic to verify they will not cause damage.

5. If further cleaning is needed, one of the following products may be used: Meguiar's Gold Class™ Bug and Tar Remover, 3M™ Citrus Base

Cleaner, a mixture of two parts isopropyl alcohol to one part water (mix ratio 2:1), or denatured alcohol.

6. Immediately rinse off all residue with clean water.
7. To reduce water spotting, immediately use a silicone squeegee to remove water.
8. Dry with a clean microfiber cloth.

To Clean Fuel Spills

• CAUTION •

Immediately clean fuel spills to avoid degrading the vinyl and adhesive used in the graphic.

1. Wipe off spilled fuel.
2. Clean graphic with a wet, non-abrasive detergent such as 3M™ Car Wash Soap 39000, Meguiar's NXT Generation® Car Wash, or Deep Crystal® Car Wash, and a soft, clean cloth or sponge.
3. Rinse thoroughly with clean water.
4. To reduce water spotting, immediately use a silicone squeegee to remove water.
5. Dry with a clean microfiber cloth.

Graphic Restoration

If typical cleaning methods fail to produce satisfactory results, refer to the recommended restoration products and mixtures below to help preserve the condition of the graphics on your aircraft.

• CAUTION •

Do not use abrasive polishes or cutting compounds.

Do not use polish or wax on graphics with a matte or texture finish.

Initially test restoration products and mixtures on an inconspicuous area of the graphic to verify they will not cause damage.

• NOTE •

Use an all-purpose cleaner to remove wax or wax residue.

Recommended Graphic Restoration Products and Mixtures

Film or Finish Type	Cleaning Product or Mixture	Supplier
Smooth Gloss	3M™ Perfect-it™ Show Car Paste Wax 39526	3M Company
	Meguiar's Gold Class™ Carnuaba Plus Premium Liquid Wax	Meguiar's
Matte or Satin Texture	Mixture of two parts isopropyl alcohol to one part water (mix ratio 2:1)	Any Source
Matte White (1080-M10) Carbon Fiber White Texture (1080-CF10)	Depending on the type and degree of contamination to be removed, use one or more of the following solutions in the order shown: 1. Hot, soapy water solution 2. Mixture of two parts isopropyl alcohol to one part water (mix ratio 2:1) 3. Simple Green® All-Purpose Cleaner 4. Household chlorine bleach, followed by a mixture of two parts isopropyl alcohol to one part water (mix ratio 2:1) 5. Mineral spirits, followed by a mixture of two parts isopropyl alcohol to one part water (mix ratio 2:1)	Any Source
Carbon Fiber or Brushed Metal Texture	3M™ Tire Restorer	3M Company
	Meguiar's Natural Shine Protectant	Meguiar's
Carbon Fiber Black Texture (1080-CF12)	Meguiar's Ultimate Black Plastic Restorer	Meguiar's

Cleaning Interior Surfaces

Seats, carpet, upholstery panels, and headliners should be vacuumed at regular intervals to remove surface dirt and dust. While vacuuming, use a fine bristle nylon brush to help loosen particles.

• CAUTION •

Remove any sharp objects from pockets or clothing to avoid damaging interior panels or upholstery.

Interior Windshield and Windows

Never rub dry acrylic. Dull or scratched window coverings may be polished using a special acrylic polishing paste.

• CAUTION •

Clean acrylic windows with a solvent-free, non-abrasive, antistatic acrylic cleaner. Do not use gasoline, alcohol, benzene, carbon tetrachloride, thinner, acetone, or glass window cleaning sprays.

Use only a non-abrasive cotton cloth or genuine chamois to clean acrylic windows. Paper towel or newspaper are highly abrasive and will cause hairline scratches.

• NOTE •

Wiping with a circular motion can cause glare rings. Use an up and down wiping motion on the windshield in the direction of the airflow to prevent this.

To prevent scratching from dirt that has accumulated on the cloth, fold cloth to expose a clean area after each pass.

To Clean Interior Windshield and Windows

1. Using a moist cloth or chamois, gently wipe the windows clean of all contaminants.
2. Apply acrylic cleaner to one area at a time, then wipe away with a soft, cotton cloth.
3. Dry the windows using a dry, non-abrasive cotton cloth or chamois.

Instrument Panel and Electronic Display Screens

The instrument panel, control knobs, and plastic trim need only to be wiped clean with a soft, damp cloth. The multifunction display, primary flight display, and other electronic display screens should be cleaned with Optimax - LCD Screen Cleaning Solution as follows:

• CAUTION •

To avoid solution dripping onto display and possibly migrating into component, apply the cleaning solution to cloth first, not directly to the display screen.

Use only a lens cloth or non-abrasive cotton cloth to clean display screens. Paper towels, tissue, or camera lens paper may scratch the display screen.

Clean display screen with power OFF.

To Clean Instrument Panel and Electronic Display Screens

1. Gently wipe the display with a dry, clean, cotton cloth.
2. Moisten clean cotton cloth with cleaning solution.
3. Wipe the soft cotton cloth across the display in one direction, moving from the top of the display to the bottom. Do not rub harshly.
4. Gently wipe the display with a dry, clean cotton cloth.

Headliner and Trim Panels

The airplane interior can be cleaned with a mild detergent or soap and water. Harsh abrasives or alkaline soaps or detergents should be avoided. Solvents and alcohols may damage or discolor vinyl or urethane parts. Cover areas where cleaning solution could cause damage.

• CAUTION •

Solvent cleaners and alcohol should not be used on interior parts. If cleaning solvents are used on cloth, cover areas where cleaning solvents could cause damage.

To Clean Headliner and Trim Panels

1. Clean headliner, and side panels, with a stiff bristle brush, and vacuum where necessary.
2. Soiled upholstery, may be cleaned with a good upholstery cleaner suitable for the material. Carefully follow the manufacturer's instructions. Avoid soaking or harsh rubbing.

Leather Upholstery and Seats

For routine maintenance, occasionally wipe leather upholstery with a soft, damp cloth. For deeper cleaning, start with mix of mild detergent and water and, if necessary, work your way up to the products available from Cirrus for more stubborn marks and stains. Do not use soaps as they contain alkaline which will alter the leather's pH balance and cause the leather to age prematurely. Cover areas where cleaning solution could cause damage.

• CAUTION •

Solvent cleaners and alcohol should not be used on leather upholstery.

To Clean Leather Upholstery and Seats

1. Clean leather upholstery with a soft bristle brush, and vacuum where necessary.
2. Wipe leather upholstery with a soft, damp cloth.
3. Soiled upholstery, may be cleaned with the approved products available from Cirrus. Avoid soaking or harsh rubbing.

Carpets

To clean carpets, first remove loose dirt with a whiskbroom or vacuum. For soiled spots and stubborn stains use a non-flammable, dry cleaning fluid. Floor carpets may be cleaned like any household carpet.

Recommended Interior Cleaning Products

Cleaning Application	Cleaning Product	Supplier
Interior Windshield and Windows	Plastic and Glass Cleaner	Prist Aerospace
Display Screens	Optimax	PhotoDon
Cabin Interior	Mild Dishwasher Soap (abrasive-free)	Any Source
Leather Upholstery	Leather Care Kit 50689-001	Hemisphere International
	Leather Cleaner 50684-001	Cirrus
	Ink Remover 50685-001	Cirrus
	Leather Conditioner 50686-001	Cirrus
	Spot and Stain Remover 50687-001	Cirrus
Vinyl Panels	Vinyl Finish Cleaner 50688-001	Cirrus
Vinyl and Leather Upholstery	Vinyl & Leather Cleaner	Sprayway, Inc.

Intentionally Left Blank

Section 9: Log of Supplements

Table of Contents

As Required

FAA Approved AFM Supplements must be in the airplane for flight operations when the subject optional equipment is installed or the special operations are to be performed.

This Log of Supplements shows all Cirrus Supplements available for the aircraft at the corresponding date of the revision level shown in the lower left corner. A check mark in the Part Number column indicates that the supplement is applicable to the AFM. Any installed supplements not applicable to the AFM are provided for reference only.

Section 10: Safety Information

Table of Contents

Introduction 3
Cirrus Airframe Parachute System (CAPS) 3
Deployment Scenarios 4
Mid-Air Collision 4
Structural Failure 4
Loss of Control 4
Landing Required in Terrain not Permitting a Safe Landing 5
Pilot Incapacitation 5
General Deployment Information 6
Deployment Speed 6
Deployment Altitude 6
Deployment Attitude 6
Landing Considerations 7
Emergency Landing Body Position 7
Door Position 7
Water Landings 8
Post-Impact Fire 8
Ground Gusts 8
Safe Return Autoland System (if installed) 9
Activation Scenarios 9
Pilot Incapacitation 10
Other 10
Landing Considerations 10

Intentionally Left Blank

Introduction

This aircraft is designed to operate safely and efficiently in a flight environment. However, like any other aircraft, pilots must maintain proficiency to achieve maximum safety, utility, and economy. Cirrus strongly recommends that all pilots seek regular recurrent training and that they operate in accordance with the Cirrus Flight Operations Manual and Envelope of Safety.

As the pilot, you must be thoroughly familiar with the contents of this Manual, the Manual Supplements, Flight Checklist, and operational guides and data provided by manufacturers of equipment installed in this airplane. You must operate the airplane in accordance with the applicable FAA operating rules and within the limitations specified in Section 2 of this Manual.

• **NOTE** •

Refer to Section 9: Log of Supplements for applicable FAA operating rules.

The Normal Procedures section of this Manual was designed to provide guidance for day-to-day operation of this airplane. The procedures given are the result of flight testing, FAA certification requirements, and input from pilots with a variety of operational experience. Become fully familiar with the procedures, perform all the required checks, and operate the airplane within the limitations and as outlined in the procedures.

Cirrus Airframe Parachute System (CAPS)

The Cirrus Airframe Parachute System (CAPS) is designed to lower the aircraft and its passengers to the ground in the event of a life-threatening emergency. CAPS deployment will likely result in damage to, or loss of, the airframe, and possible injury to the aircraft occupants. Its use should not be taken lightly. Instead, possible CAPS activation scenarios should be well thought out and mentally practiced by every Cirrus pilot. Pilots who regularly conduct CAPS training and think about using CAPS will often have a higher probability of deploying CAPS when necessary.

The following discussion is meant to guide your thinking about CAPS activation. Cirrus also recommends that pilots discuss CAPS deployment scenarios with instructors as well as fellow pilots through forums such as the Cirrus Owners and Pilots Association. In the event of a spin or loss of aircraft control, immediate CAPS activation is required. (See Section 3) In other situations, CAPS activation is at the informed discretion of the pilot in command. The following discussion is intended to be informative, not directive. It is the responsibility of you, the pilot, to determine when and how the CAPS will be used. It is important to understand, however, that numerous fatalities that have occurred in Cirrus aircraft accidents likely could have been avoided if pilots had made the timely decision to deploy

CAPS. It is also important to note that CAPS has been activated by pilots at speeds in excess of 180 knots on multiple occasions with successful outcomes. While the best speed to activate CAPS is below 140 knots indicated airspeed, a timely activation is most important for loss of control situations.

Deployment Scenarios

This section describes possible scenarios in which CAPS activation is appropriate. This list is not intended to be exhaustive, but merely illustrative of the type of circumstances when CAPS deployment could be the most appropriate means of saving the aircraft occupants.

Mid-Air Collision

A mid-air collision likely will render the airplane unflyable by damaging the control system or primary structure. If a mid-air collision occurs, immediately evaluate if the airplane is controllable and structurally capable of continued safe flight and landing. Unless it is apparent that structural and control system damage has not occurred, CAPS activation is recommended. If you are not sure of the condition of the aircraft following a mid-air collision, CAPS activation is recommended.

Structural Failure

Structural failure may result from many situations, such as: encountering severe gusts at speeds above the airplane's structural cruising speed, inadvertent full control movements above the airplane's maneuvering speed, or exceeding the design load factor while maneuvering. If a structural failure occurs, CAPS activation is recommended.

Loss of Control

Loss of control may result from many situations, such as: a control system failure (disconnected or jammed controls); severe wake turbulence, severe turbulence causing upset, severe airframe icing, or pilot disorientation caused by vertigo or panic. If loss of control occurs, the CAPS should be activated immediately.

• WARNING •

In the event of a spin, immediate CAPS activation is mandatory. Under no circumstances should the pilot attempt recovery from a spin other than by CAPS activation.

Landing Required in Terrain not Permitting a Safe Landing

If a forced landing on an unprepared surface is required CAPS activation is recommended unless the pilot in command concludes there is a high likelihood that a safe landing can be accomplished. If a condition requiring a forced landing occurs over rough or mountainous terrain, over water out of gliding distance to land, over widespread ground fog or at night, CAPS activation is strongly recommended. Numerous fatalities that have occurred in Cirrus aircraft accidents likely could have been avoided if pilots had made the timely decision to deploy CAPS.

While attempting to glide to an airfield to perform a power off landing, the pilot must be continuously aware of altitude and ability to successfully perform the landing. Pilot must make the determination by 2000' AGL if the landing is assured or if CAPS will be required.

Pilot Incapacitation

Pilot incapacitation may be the result of anything from a pilot's medical condition to a bird strike that injures the pilot. If incapacitation occurs and the passengers are not trained to land the aircraft, CAPS activation by the passengers is highly recommended. This scenario should be discussed with passengers prior to flight and all appropriate passengers should be briefed on CAPS operation so they could effectively deploy CAPS if required.

Serials w/ Safe Return Autoland: If incapacitation occurs and the passengers are not trained to land the aircraft, passengers should activate Safe Return Autoland. If a red slashed circle (⊘) is illuminated on the Safe Return Autoland activation panel, Safe Return Autoland is unavailable. If Safe Return Autoland is active but cannot safely land the aircraft, the passenger information screen on the MFD will recommend considering CAPS activation. In these scenario CAPS should be activated by the passengers.

These scenarios should be discussed with passengers prior to flight and all appropriate passengers should be briefed on CAPS operation so they could effectively activate CAPS if required. The CAPS operation briefing should include the following:

- Reference to the passenger briefing card.
- Use of the LVL button.
- Use of the CAPS activation handle.

General Deployment Information

Deployment Speed

The maximum speed at which deployment has been demonstrated is 140 KIAS. Deployment at higher speeds could subject the parachute and aircraft to excessive loads that could result in structural failure. Once a decision has been made to deploy the CAPS, make all reasonable efforts to slow to the minimum possible airspeed. However, if time and altitude are critical, and/or ground impact is imminent, the CAPS should be activated regardless of airspeed.

Deployment Altitude

The altitude loss during a particular deployment depends upon the airplane's airspeed, altitude and attitude at deployment as well as other environmental factors. In all cases, however, the chances of a successful deployment increase with altitude. In the event of a spin, immediate CAPS activation is mandatory regardless of altitude. In other situations, the pilot in command may elect to troubleshoot a mechanical problem or attempt to descend out of icing conditions if altitude and flight conditions permit. If circumstances permit, it is advisable to activate the CAPS at or above 2,000 feet AGL. The minimum recommend altitude for activating CAPS is 600 feet AGL. A low altitude deployment leaves little or no time for the aircraft to stabilize under the canopy or for the cabin to be secured and increases the risk of injury or death. At any altitude, once the CAPS is determined to be the only alternative available for saving the aircraft occupants, deploy the system without delay.

Deployment Attitude

The CAPS has been tested in all flap configurations at speeds ranging from V_{SO} to V_A. Most CAPS testing was accomplished from a level attitude. Deployment from a spin was also tested. From these tests it was found that as long as the parachute was introduced to the free air by the rocket, it would successfully recover the aircraft into its level descent attitude under parachute. However, it can be assumed that to minimize the chances of parachute entanglement and reduce aircraft oscillations under the parachute, the CAPS should be activated from a wings-level, upright attitude if at all possible.

Landing Considerations

After a CAPS deployment, the airplane will descend at less than 1700 feet per minute with a lateral speed equal to the velocity of the surface wind. The CAPS landing touchdown is equivalent to ground impact from a height of approximately 13 feet. While the airframe, seats, and landing gear are designed to accommodate the stress, occupants must be prepared for the landing. The overriding consideration in all CAPS deployed landings is to prepare the occupants for the touchdown in order to protect them from injury as much as possible.

Emergency Landing Body Position

The most important consideration for a touchdown with CAPS deployed is to protect the occupants from injury, especially back injury. Contacting the ground with the back offset attempting to open a door or secure items increases the likelihood of back injury. All occupants must be in the emergency landing body position well before touchdown. After touchdown, all occupants should maintain the emergency landing body position until the airplane comes to a complete stop.

The emergency landing body position is assumed with tightened seat belt and shoulder harness by placing both hands beside the legs, and holding the upper torso erect and against the seat backs. The seat cushions contain an aluminum honeycomb core designed to crush under impact to absorb downward loads and help protect the spine from compression injury.

Door Position

For most situations, it is best to leave the doors latched and use the time available to transmit emergency calls, shut down systems, and get into the Emergency Landing Body Position well before impact. The discussion below gives some specific recommendations, however, the pilot's decision will depend upon all factors, including time to impact, altitude, terrain, winds, condition of airplane, etc.

There is the possibility that one or both doors could jam at impact. If this occurs, to exit the airplane, the occupants will have to force open a partially jammed door or break through a door window using the Emergency Exit Hammer located in the lid of the center armrest. This can significantly delay the occupants from exiting the airplane.

If the pilot elects to touchdown with a door opened, there are several additional factors the pilot must consider: loss of door, possibility of head injury, or injury from an object coming through the open door.

- If a door is open prior to touchdown in a CAPS landing, the door will most likely break away from the airplane at impact.
- If the door is open and the airplane contacts the ground in a rolled condition, an occupant could be thrown forward and strike their head on the exposed door pillar. Contacting the ground in a rolled condition

could be caused by terrain that is not level, contacting an obstacle such as a tree, or by transient aircraft attitude.

- With a door open, it is possible for an object such as a tree limb or flying debris to come through the opening and strike an occupant.

• WARNING •

If it is decided to unlatch a door, unlatch one door only. Opening only one door will provide for emergency egress as well as reduce risks associated with ground contact. Typically, this would be the copilot's door as this allows the other occupants to exit first after the airplane comes to rest.

Water Landings

The ability of the airplane to float after a water landing has not been tested and is unknown. However, since there is the possibility that one or both doors could jam and use of the emergency egress hammer to break out a window could take some time, the pilot may wish to consider unlatching a door prior to assuming the emergency landing body position in order to provide a ready escape path should the airplane begin to sink.

Post-Impact Fire

If there is no fire prior to touchdown and the pilot is able to shut down the engine, fuel, and electrical systems, there is less chance of a post impact fire. If the pilot suspects a fire could result from impact, unlatching a door immediately prior to assuming the emergency landing body position should be considered to assure rapid egress.

Ground Gusts

If it is known or suspected that ground gusts are present in the landing zone, there is a possibility that the parachute could drag the airplane after touchdown, especially if the terrain is flat and without obstacles. In order to ensure that the occupants can escape the airplane in the timeliest manner after the airplane comes to rest, the pilot may elect to unlatch the copilot's door for the CAPS landing. Occupants must be in the Emergency Landing Body Position for touchdown. Occupants must not loosen seat belts until the airplane comes to rest. When the airplane comes to rest, the occupants should exit the airplane and immediately move upwind to prevent a sudden gust from dragging the airplane in their direction.

Safe Return Autoland System (if installed)

The Safe Return Autoland system is designed to safely land the aircraft in the event of pilot incapacitation. Once activated, it performs the following:

- Declares an emergency and provides periodic status updates
- Selects the closest suitable airport
- Navigates via the most direct route possible while avoiding terrain and undesirable weather if weather information is available for use
- Lands the aircraft, brings it to a stop, and shuts down the engine

• NOTE •

Safe Return Autoland evaluates runway length, width, elevation, gradient, terminal area weather, time to destination, and aircraft fuel state to select a destination.

Safe Return Autoland uses METAR data in determining destination suitability. If METAR data is unavailable, the system may select a less suitable destination.

Safe Return Autoland uses NEXRAD weather information to route around weather. If NEXRAD data is unavailable, the system will be unable to route around weather.

• WARNING •

Safe Return Autoland assumes a fully functional airplane in order to function properly, and is not designed to mitigate system failures. Any system failure that prevents the AFCS or engine from functioning, or the FMS from navigating, will also prevent Safe Return Autoland from functioning. CAPS activation by the passengers should then be used. Other failures including (but not limited to) flaps or radar altimeter, will degrade system performance, and may result in damage to the airframe and possible injury to the occupants.

Because of these conditions and limitations, Safe Return Autoland should only be activated in a true pilot incapacity emergency situation.

Activation Scenarios

This section describes possible scenarios in which Safe Return Autoland activation is appropriate. This list is not intended to be exhaustive, but merely illustrative of the type of circumstances when Safe Return Autoland activation could be the most appropriate means of saving the aircraft occupants.

Pilot Incapacitation

Pilot incapacitation may be the result of anything from a pilot's medical condition to a bird strike that injures the pilot such that he/she can not safely fly and land the airplane. If pilot incapacitation occurs, and no other pilots are on board, passengers should activate the Safe Return Autoland system. If required airplane system functionality is degraded or unavailable, the Safe Return Autoland system will indicate the degraded condition via a red slashed circle (⊘) illuminated on the Safe Return Autoland activation panel or shown on the respective passenger informational screen while Safe Return Autoland is active.

Passengers must be briefed to recognize that, in rare cases, sufficient fuel may be unavailable to reach a suitable runway. This information is provided on the flight display during Safe Return Autoland activation.

In the event that Safe Return Autoland is unavailable, or there is not sufficient fuel to reach the system's target airport once Safe Return Autoland has been activated, CAPS activation by the passengers should then be used. This scenario should be discussed with passengers prior to flight and all appropriate passengers should be briefed on Safe Return Autoland operation so they could effectively activate Safe Return Autoland if required.

The Safe Return Autoland operation briefing should include the following:

- Reference to the passenger briefing card.
- Use of the Safe Return Autoland pushbutton.
- Status indications “system unavailable or degraded” red slashed circle (⊘) to the left of the button, “activated” green landing airplane icon to the right of the button.
- Fuel remaining until landing and estimated time until landing.
- GTC push-to-talk for passenger emergency communications.

Other

Safe Return Autoland activation should be considered any time the pilot is unable to safely fly the aircraft.

Landing Considerations

After a Safe Return Autoland landing, the airplane must be recovered from the runway and inspected for damage due to a potential hard landing.

• NOTE •

The brakes will be locked on until they are reset. Refer to Section 8: Handling and Servicing, "Safe Return Autoland Runway Recovery".