PILOT'S INFORMATION MANUAL

for the CIRRUS SR22

with Cirrus Perspective Touch+ Avionics System

This manual includes descriptions of the airplane and its systems.

Copyright © 2025 - All Rights Reserved
Cirrus Aircraft
4515 Taylor Circle
Duluth, MN 55811

P/N 44766-001
Revision 1

List of Effective Pages

Use this page to determine the current effective date for each page in the PIM.

Dates of original issue and revised pages are:

Original Issue.....04 Dec 2023

Revision 1.....03 Apr 2025

Revision 2.....06 Oct 2025

Revision 3.....17 Nov 2025

Page	Status	Page	Status	Page	Status
Cover Page-i	Revision 1	5-2	Revision 1	10-9	Revision 1
Cover Page-ii	Revision 1	5-3	Original Issue	10-10	Original Issue
LOEP-1	Revision 3	5-4	Original Issue	11-1	Original Issue
LOEP-2	Revision 3	5-5	Revision 1	11-2	Original Issue
Front-1	Revision 1	5-6	Original Issue	11-3	Revision 1
Front-2	Revision 1	5-7	Revision 1	11-4	Original Issue
Front-3	Revision 2	5-8	Revision 1	11-5	Revision 1
Front-4	Revision 2	6-1	Original Issue	11-6	Original Issue
1-1	Original Issue	6-2	Original Issue	11-7	Original Issue
1-2	Original Issue	6-3	Revision 1	11-8	Revision 2
1-3	Original Issue	6-4	Revision 1	11-9	Revision 1
1-4	Revision 1	7-1	Original Issue	11-10	Original Issue
1-5	Revision 1	7-2	Original Issue	11-11	Original Issue
1-6	Original Issue	7-3	Revision 1	11-12	Original Issue
2-1	Original Issue	7-4	Original Issue	12-1	Revision 1
2-2	Original Issue	7-5	Revision 1	12-2	Revision 1
2-3	Revision 1	7-6	Original Issue	12-3	Revision 1
2-4	Original Issue	7-7	Revision 1	12-4	Original Issue
2-5	Revision 1	7-8	Original Issue	12-5	Revision 1
2-6	Original Issue	7-9	Original Issue	12-6	Revision 1
2-7	Original Issue	7-10	Original Issue	12-7	Revision 1
2-8	Original Issue	8-1	Original Issue	12-8	Revision 1
3-1	Revision 1	8-2	Original Issue	12-9	Revision 1
3-2	Revision 1	8-3	Original Issue	12-10	Revision 1
3-3	Revision 1	8-4	Original Issue	13-1	Revision 1
3-4	Revision 1	8-5	Revision 1	13-2	Revision 1
3-5	Revision 1	8-6	Original Issue	13-3	Revision 1
3-6	Revision 1	9-1	Revision 1	13-4	Original Issue
3-7	Revision 1	9-2	Revision 1	13-5	Original Issue
3-8	Revision 1	9-3	Original Issue	13-6	Original Issue
3-9	Revision 1	9-4	Revision 1	13-7	Original Issue
3-10	Revision 1	9-5	Revision 1	13-8	Original Issue
3-11	Revision 1	9-6	Original Issue	13-9	Revision 1
3-12	Revision 1	9-7	Revision 1	13-10	Original Issue
4-1	Revision 1	9-8	Original Issue	14-1	Revision 1
4-2	Revision 1	9-9	Original Issue	14-2	Revision 1
4-3	Original Issue	9-10	Original Issue	14-3	Revision 1
4-4	Revision 1	10-1	Original Issue	14-4	Original Issue
4-5	Original Issue	10-2	Original Issue	14-5	Revision 1
4-6	Revision 1	10-3	Original Issue	14-6	Revision 1
4-7	Revision 1	10-4	Revision 1	14-7	Revision 1
4-8	Revision 1	10-5	Revision1	14-8	Revision 1
4-9	Revision 1	10-6	Revision 1	15-1	Revision 1
4-10	Revision 1	10-7	Revision 1	15-2	Revision 1
5-1	Revision 1	10-8	Original Issue	15-3	Revision 1

List of Effective Pages (Cont.)

Page	Status	Page	Status	Page	Status
15-4	Revision 1	18-7	Revision 2		
15-5	Original Issue	18-8	Original Issue		
15-6	Revision 1	19-1	Original Issue		
15-7	Revision 1	19-2	Original Issue		
15-8	Revision 1	19-3	Revision 1		
15-9	Revision 1	19-4	Original Issue		
15-10	Revision 1	19-5	Original Issue		
15-11	Revision 1	19-6	Original Issue		
15-12	Revision 1	20-1	Revision 1		
15-13	Revision 1	20-2	Revision 1		
15-14	Revision 1	20-3	Revision 1		
16-1	Revision 1	20-4	Revision 1		
16-2	Revision 1	20-5	Revision 1		
16-3	Original Issue	20-6	Revision 1		
16-4	Original Issue	20-7	Revision 1		
16-5	Original Issue	20-8	Revision 1		
16-6	Revision 1	21-1	Revision 1		
16-7	Revision 1	21-2	Revision 1		
16-8	Original Issue				
17-1	Revision 2				
17-2	Revision 2				
17-3	Revision 2				
17-4	Revision 2				
17-5	Revision 2				
17-6	Revision 1				
17-7	Revision 1				
17-8	Revision 1				
17-9	Revision 1				
17-10	Revision 1				
17-11	Revision 1				
17-12	Revision 1				
17-13	Revision 1				
17-14	Revision 1				
17-15	Revision 1				
17-16	Revision 1				
17-17	Revision 2				
17-18	Revision 2				
17-19	Revision 2				
17-20	Revision 2				
17-21	Revision 2				
17-22	Revision 2				
17-23	Revision 2				
17-24	Revision 2				
17-25	Revision 2				
17-26	Revision 2				
17-27	Revision 2				
17-28	Revision 2				
18-1	Revision 1				
18-2	Revision 1				
18-3	Original Issue				
18-4	Revision 1				
18-5	Original Issue				
18-6	Revision 3				

Foreword

This manual has been prepared by Cirrus Aircraft to familiarize operators with the aircraft. Read this manual carefully. It provides system descriptions, operational procedures, and basic information for maintaining the airplane.

• NOTE •

All liquid volumes referenced in this publication are expressed in United States Customary Units, e.g., U.S. Gallons.

For more information about the Avionics System, refer to Cirrus Perspective Touch+ Avionics System Pilot's Guide.

The Pilot's Information Manual

This manual has been prepared using General Aviation Manufacturers Association (GAMA) Specification #1 for Pilot's Operating Handbook, Revision 2, dated 18 October 1996 as the content model and format guide. However, some deviations from this specification were made for clarity. Logical and convenient Tables of Contents are located at the beginning of each chapter to aid in locating specific data within that chapter.

Chapter 1 ..... Airframe
Chapter 2 ..... Flight Controls
Chapter 3 ..... Instrument Panel
Chapter 4 ..... Flight Instruments
Chapter 5 ..... Wing Flaps
Chapter 6 ..... Landing Gear
Chapter 7 ..... Seats
Chapter 8 ..... Doors and Windows
Chapter 9 ..... Powerplant
Chapter 10 ..... Fuel
Chapter 11 ..... Electrical
Chapter 12 ..... Lighting
Chapter 13 ..... Environmental Control
Chapter 14 ..... Air Data System
Chapter 15 ..... Automation
Chapter 16 ..... Ice Protection
Chapter 17 ..... Avionics
Chapter 18 ..... Cabin Features
Chapter 19 ..... Recovery System
Chapter 20 ..... Safe Return Autoland System
Chapter 21 ..... Log of Supplements

Revising the Manual

Two types of revisions may be issued for this manual: Temporary and Numbered.

Temporary revisions are printed on yellow paper, normally cover only one topic or procedure, and are issued to provide safety related information or other time-sensitive information where the rigor of providing a numbered revision is not possible in the time allowed. All the information needed to properly file a temporary revision is included on the revision itself. Typically, a temporary revision is superseded and replaced by the next numbered revision.

Numbered revisions are printed on white paper, normally cover several subjects, and are issued as general updates. Each numbered revision includes an "Instruction Sheet," a "List of Effective Pages", and a "Revision Highlights" page. The "Instruction Sheet" is intended to assist the manual holder in removing superseded pages and inserting new or superseding pages. The "List of Effective Pages" shows the issue or revision status of all pages in the manual. The "Revision Highlights" page gives a brief description of changes made to each page in the current revision.

• NOTE •

The owner is responsible to ensure that the manual is current at all times. Therefore, it is very important that all revisions be properly incorporated as soon as they are available.

Identifying Revised Material

Each page has revision identification at the lower inside corner opposite the page number. Original Issue pages will be identified by the words "Original Issue" at this location. In the event that the majority of pages are revised, Cirrus Aircraft may determine that it is more effective to reissue the manual. Reissued pages will be identified by the word "Reissue" followed by a letter indicating the reissue level; for example, "Reissue A" Revised pages will be identified by the word "Revision" followed by the revision number at this location; for example, "Revision 2" (Original Issue, Revision 2) or "Revision B1" (Reissue B, Revision 1).

Revised material on a page can be identified by a change bar located at the outside page margin.

Obtaining Revisions

Revisions, temporary revisions, and supplements can be downloaded from Cirrus Aircraft at www.cirrusaircraft.com.

Paper copies of revisions and supplements can be purchased from Cirrus Aircraft at www.cirrusaircraft.com.

Supplements

The Supplements chapter contains supplementary information relating to optional equipment not provided with the standard airplane or not included in the manual. Supplements are essentially "mini-handbooks" and may contain data corresponding to most chapters of the manual. Data in a supplement either adds to, supersedes, or replaces similar data in the basic manual.

Retention of Data

In the event a new manual is purchased, the owner must ensure that all information applicable to the airplane is transferred to the new manual.

It is not a requirement that owners retain information, such as supplements, that is no longer applicable to their airplane.

Warnings, Cautions, and Notes

Warnings, Cautions, and Notes are used throughout this manual to focus attention on special conditions or procedures as follows:

• WARNING •

Warnings are used to call attention to operating procedures which, if not strictly observed, may result in personal injury or loss of life.

• CAUTION •

Cautions are used to call attention to operating procedures which, if not strictly observed, may result in damage to equipment.

• NOTE •

Notes are used to highlight specific operating conditions or steps of a procedure.

Airplane Serial Number Effectivity

Airplane serial number effectivity references are used throughout the PIM to distinguish between different models, system designs, and descriptions. The effectivities are italicized and are displayed in the same font weight as the adjacent text.

Special Conditions

Aircraft used for evaluating new systems before entering regular production can cause a "split" or a break in the aircraft serial number range due to a system being installed as a "pilot", the system being removed from the production line configuration, and the system later being reintroduced at configuration launch. Additionally, similar effectivity splits can be caused by factory built aircraft used as company demonstrators and then later updated to conform to type design with a more current configuration.

For example, a split effectivity listing of "Serials 22-1234, 22-1240 and subs" indicates that a part or assembly was installed on aircraft serial number 22-1234, then removed on serial numbers 22-1235 through 22-1239, and then introduced as standard configuration on aircraft serial numbers 22-1240 and subsequent.

In many instances these split effectivities can result in difficult-to-interpret descriptions listing multiple serial numbers. To avoid including these cumbersome descriptions throughout the length of this publication, see the following Special Conditions table for a list of affected aircraft serial numbers and instruction on how to disposition the aircraft's as-built configuration.

Serial Number	Special Condition	Disposition
11013	Aircraft installed with Iridium Transceiver 56C, Iridium Antenna GA 62, and high power USB port.	For serial numbers listed to the left, unless otherwise noted, refer to the "*Serials 11111 and subs:*" sections for the applicable system descriptions.
11076		
11079		
11081		
11093		
11100		
11101		
11103		
11105		
11107		
11108		
11109		

Chapter 1: Airframe

Table of Contents

Airframe 3
Fuselage 3
Overview 3
Wings 3
Overview 3
Empennage 4
Overview 4

Intentionally Left Blank

Airframe

Fuselage

Overview

The airplane's monocoque fuselage is constructed primarily of composite materials and is designed to be aerodynamically efficient. The cabin area is bounded on the forward side by the firewall at fuselage station 100, and on the rear by the aft baggage compartment bulkhead at fuselage station 222. Comfortable seating is provided for the pilot and up to four passengers. A composite roll cage within the fuselage structure provides roll protection for the cabin occupants. The cabin and baggage compartment floors are constructed of a foam core composite with access to under-floor components.

All flight and static loads are transferred to the fuselage structure from the wings and control surfaces through four wing attach points in two locations under the front seats and two locations on the sidewall just aft of the rear seats.

The lower firewall employs a 20° bevel to improve crashworthiness. In addition, an avionics bay is located aft of bulkhead 222 and accessible through an access panel installed on the RH side of the aft fuselage.

Wings

Overview

The wing structure is constructed of composite materials producing wing surfaces that are smooth and seamless. The wing cross section is a blend of several high performance airfoils. A high aspect ratio results in low drag. Each wing provides attach structure for the main landing gear and contains a 47.25-gallon fuel tank.

The wing is constructed in a conventional spar, rib, and shear section arrangement. The upper and lower skins are bonded to the spar, ribs, and aft shear web forming a torsion box that carries all of the wing bending and torsion loads. The rear shear webs are similar in construction but do not carry through the fuselage. The main spar is laminated epoxy/carbon fiber in a C-section, and is continuous from wing tip to wing tip. The wing spar passes under the fuselage below the two front seats and is attached to the fuselage in two locations. Lift and landing loads are carried by the single carry-through spar, plus a pair of rear shear webs (one on each wing) attached to the fuselage.

Empennage

Overview

The empennage consists of a horizontal stabilizer, a two-piece elevator, a vertical stabilizer, and a rudder. All of the empennage components are conventional spar (shear web), rib, and skin construction.

The horizontal stabilizer is a single composite structure from tip to tip. The two-piece elevator, attached to the horizontal stabilizer, is aluminum.

The vertical stabilizer is composite structure integral to the main fuselage shell for smooth transfer of flight loads. The single-piece rudder, attached to the vertical stabilizer, is aluminum.

Figure 1-1: Equipment Locations

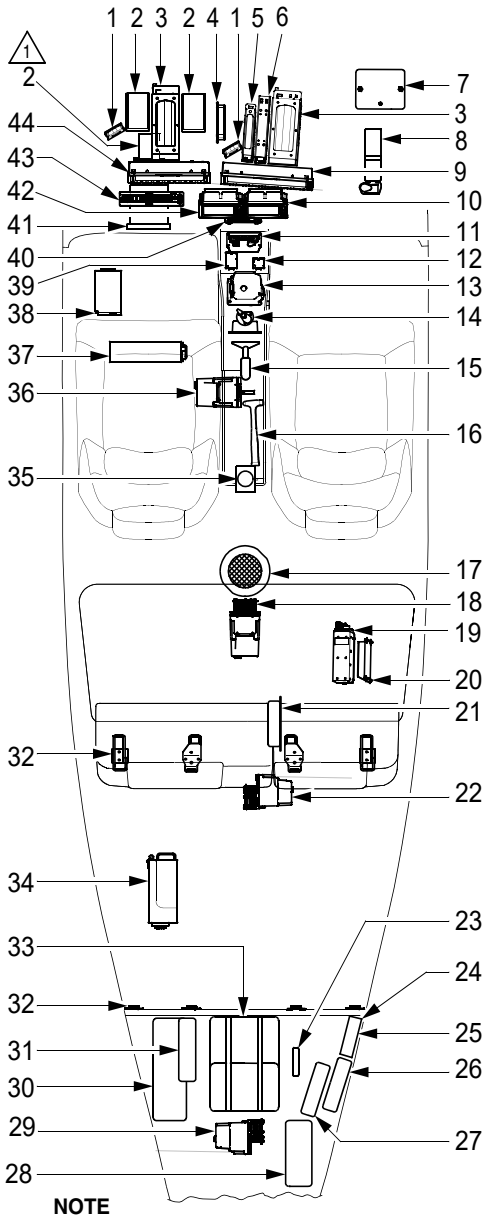

LEGEND

1. Avionics Cooling Fan
2. ADAHRS
3. Integrated Avionics Unit
4. Stick Shaker Controller
5. Audio Panel
6. Engine Interface
7. Battery 1
8. Fire Extinguisher
9. MFD
10. GTC 2
11. Center Console Switch Panel
12. Single USB-C Charging
13. Throttle Servo (if installed)
14. Fuel Tank Selector/AFSS
15. CAPS Activation Handle
16. Egress Hammer
17. Cabin Speaker
18. Roll Servo
19. Radar Altimeter (if installed)
20. Convenience System Controller
21. Pitch Trim Adapter
22. Pitch Servo
23. XM Radio Receiver (if installed)
24. LTE Datalink (if installed)
25. Gateway Module (if installed)
26. Transponder
27. XM Satellite Data Link Receiver (if installed)
28. ELT
29. Yaw Servo
30. Battery 2
31. Iridium Global Satellite Datalink (if installed)
32. Tiedown Loops
33. CAPS Parachute
34. Stormscope WX-500 (if installed)
35. Safe Return Activation Panel
36. Mixture Servo (if installed)
37. TAS Receiver (if installed)
38. DME (if installed)
39. Single USB-C PD Charging
40. AFCS Mode Controller
41. GTC 1 / SFD
42. ADF (if installed)
43. Bolster Switch Panel
44. PFD

NOTE

1 Optional MD302 ADAHRS shown.

SR22_PM01_1002A

Intentionally Left Blank

Chapter 2: Flight Controls

Table of Contents

Flight Controls 3
Elevator System 3
Overview 3
Operation 3
Aileron System 5
Overview 5
Operation 5
Rudder System 7
Overview 7
Operation 7
Control Locks 7

Intentionally Left Blank

Flight Controls

Conventional flight controls for ailerons, elevator, and rudder are used. The ailerons and elevator are controlled through either of two side sticks. The rudder is controlled through either of two sets of rudder pedals. The control system uses a combination of push rods, cables, and bell cranks for control of the surfaces.

Elevator System

Overview

The two-piece elevator provides airplane pitch control. The elevator is of conventional design with skin, spar and ribs manufactured from aluminum. Each elevator half is attached to the horizontal stabilizer at two hinge points and to the fuselage tailcone at the elevator control sector.

Operation

Elevator motion is generated through the side sticks by sliding the side stick tubes forward or aft in a bearing carriage. A push-pull linkage is connected to a cable sector mounted on a torque tube. A single cable system runs from the forward elevator sector under the cabin floor to the aft elevator sector pulley. A push-pull tube connected to the aft elevator sector pulley transmits motion to the elevator bellcrank attached to the elevators.

Pitch Trim System

The pitch trim system employs a ground adjustable trim tab and a spring cartridge activated by an electric motor. The spring cartridge, directly connected to the elevator bellcrank and the electric trim motor, provides a centering force regardless of the direction of control surface deflection.

Pitch trim is provided by adjusting the neutral position of the compression spring cartridge in the elevator control system by means of an electric motor. An electric motor changes the neutral position of the spring cartridge attached to the elevator control horn. A conical trim switch located on top of each side stick controls the motor. Moving the switch forward will initiate nose-down trim and moving the switch aft will initiate nose-up trim. Neutral (takeoff) trim is indicated by the alignment of a reference mark on the side stick tube with a tab attached to the instrument panel bolster. The elevator trim also provides a secondary means of airplane pitch control in the event of a failure in the primary pitch control system not involving a jammed elevator.

A ground adjustable trim tab is installed on the elevator to provide small adjustments in neutral trim. This tab is factory set and does not normally require adjustment.

Pitch trim operates on 28 VDC provided through the 2-amp PITCH TRIM circuit breaker on Essential Bus 2.

Figure 2-1: Elevator System

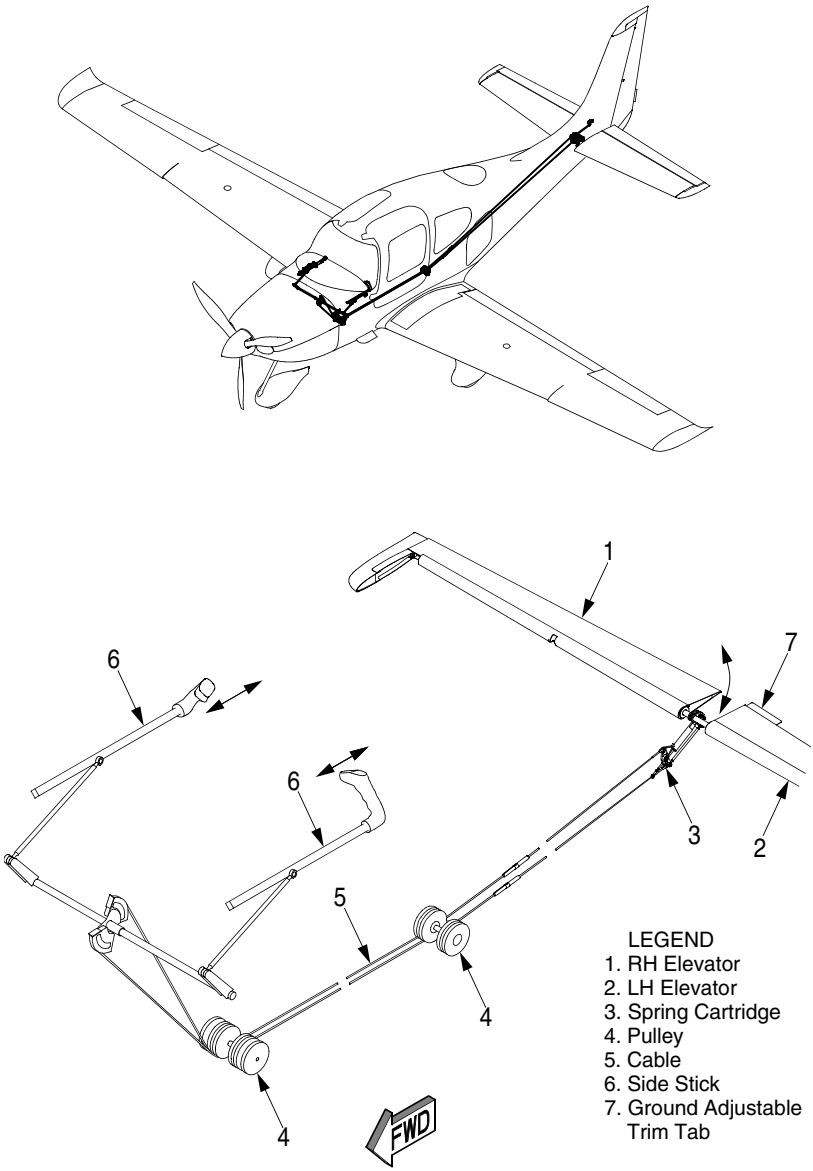

Aileron System

Overview

The ailerons provide airplane roll control. The ailerons are of conventional design with skin, spar and ribs manufactured of aluminum. Each aileron is attached to the wing shear web at two hinge points.

Operation

Aileron control motion is generated through the side sticks by rotating the side sticks in pivoting bearing carriages. Push rods link the pivoting carriages to a centrally located pulley sector. A single cable system runs from the sector to beneath the cabin floor and aft of the rear spar. From there, the cables are routed in each wing to a vertical sector/crank arm that rotates the aileron through a right angle conical drive arm.

Roll Trim System

Ground adjustable trim tabs are installed on both ailerons to provide small adjustments in neutral trim. These tabs are factory set and do not normally require adjustment.

Roll trim is provided by adjusting the neutral position of a compression spring cartridge in the aileron control system by means of an electric motor.

An electric motor changes the neutral position of a spring cartridge attached to the left actuation pulley in the wing. A conical trim switch located on top of each side stick controls the motor. Moving the switch left will initiate left-wing-down trim and moving the switch right will initiate right-wing-down trim. Neutral trim is indicated by the alignment of the upward facing corner of the square side stick tube with the centering indication marked on the roll trim placard. The roll trim also provides a secondary means of airplane roll control in the event of a failure in the primary roll control system not involving jammed ailerons.

Roll trim operates on 28 VDC provided through the 2-amp ROLL TRIM circuit breaker on Essential Bus 2.

Figure 2-2: Aileron System

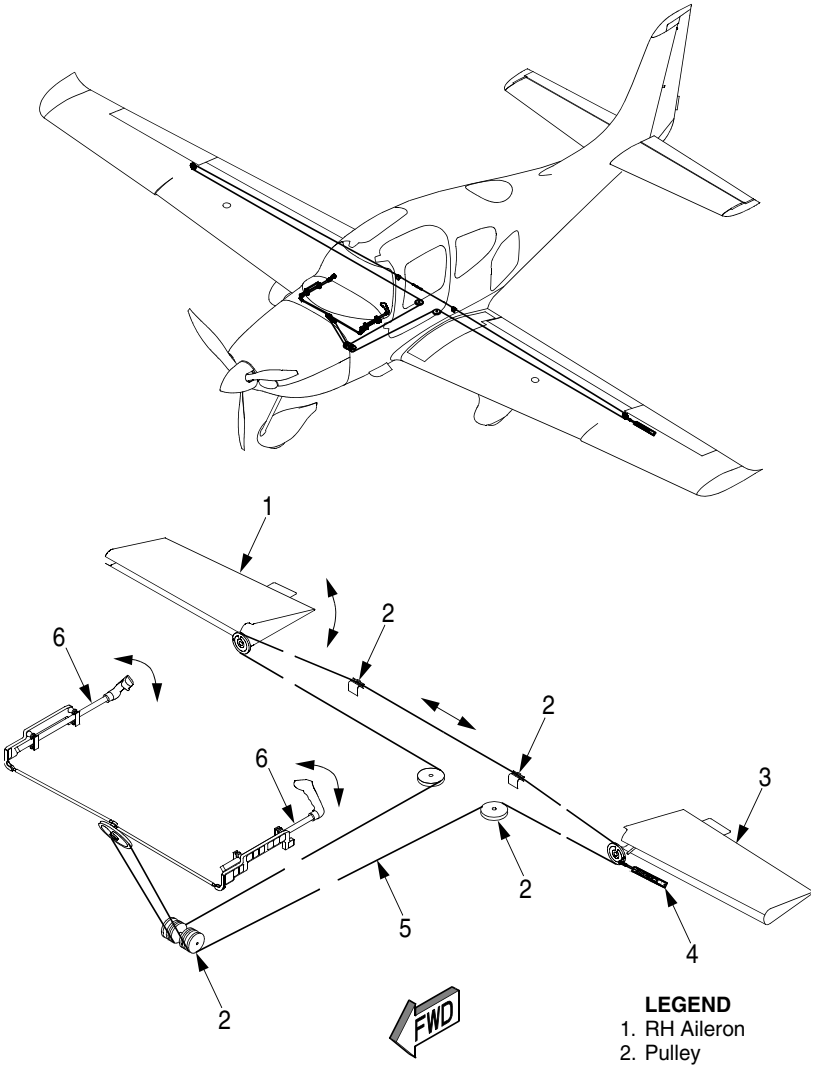

LEGEND
1. RH Aileron
2. Pulley
3. LH Aileron
4. Spring Cartridge
5. Cable
6. Side Stick

SR22_PM02_1011

Rudder System

Overview

The rudder provides directional (yaw) control. The rudder is of conventional design with skin, spar and ribs manufactured of aluminum. The rudder is attached to the aft vertical stabilizer shear web at three hinge points and to the fuselage tailcone at the rudder control bell crank.

Operation

Rudder motion is transferred from the rudder pedals to the rudder by a single cable system under the cabin floor to a sector next to the elevator sector pulley in the aft fuselage. A push-pull tube from the sector to the rudder bell crank translates cable motion to the rudder. Springs and a ground adjustable spring cartridge connected to the rudder pedal assembly tension the cables and provide centering force.

Yaw Trim System

Centering springs are attached to the rudder pedal torque tube and console structure and provide a centering force regardless of the direction of rudder deflection.

Yaw trim is provided by a ground adjustable trim tab installed on the rudder to provide small adjustments in neutral trim. This tab is factory set and does not normally require adjustment.

Control Locks

The airplane's control system is not equipped with gust locks. The centering springs have sufficient power to act as a gust damper without rigidly locking the position.

Figure 2-3: Rudder System

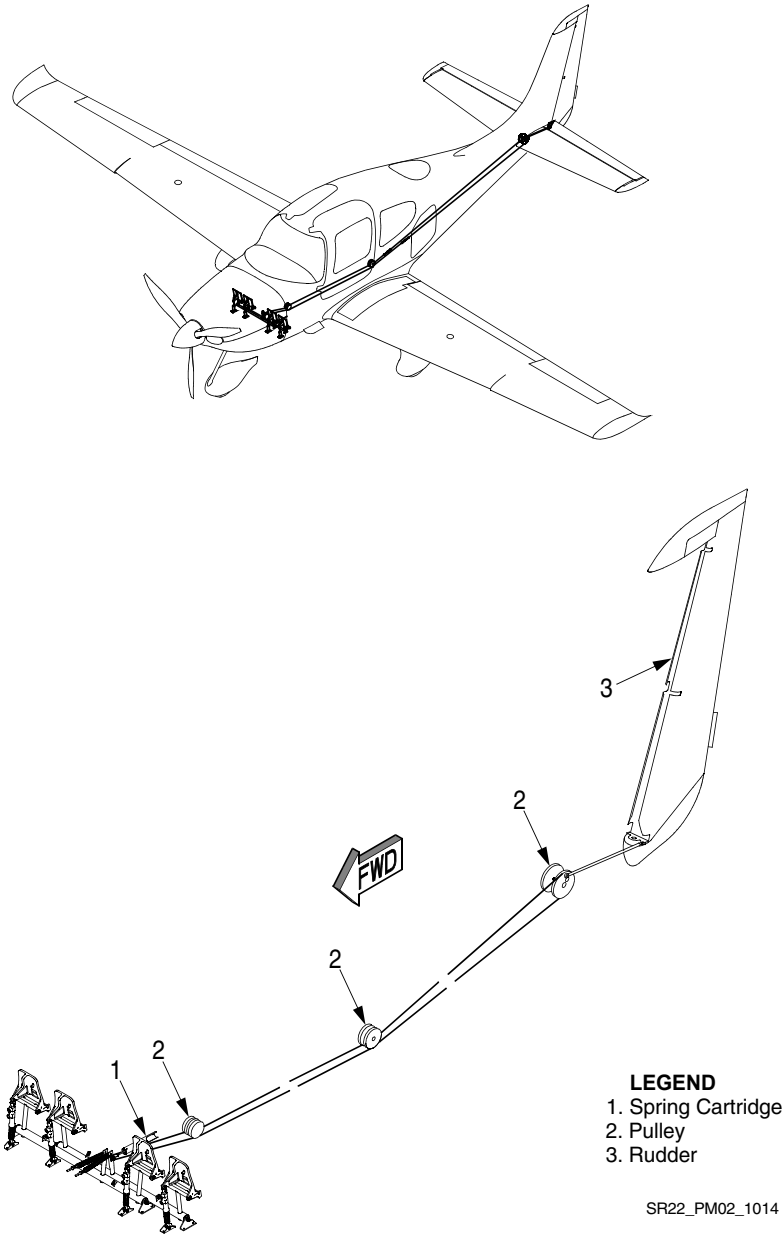

Chapter 3: Instrument Panel

Table of Contents

Instrument Panel 3
Overview 3
Pilot Instrument Panel Arrangement 3
Overview 3
Operation 3
Center Console Arrangement 4
Overview 4
Operation 4
Bolster Panel Arrangement 7
Overview 7
Operation 7
Power Source 7
Engine Start and Ignition Control Arrangement 9
Overview 9
Operation 9
Center Console Switch Panel 9
Overview 9
Operation 9
System Circuit Breaker Panel Arrangement 10
Overview 10
Operation 10
Safe Return Autoland Panel Arrangement (If Installed) 11
Overview 11
Operation 11

Intentionally Left Blank

Instrument Panel

Overview

The instrument panel is installed in sections so equipment can be easily removed for maintenance. The surrounding glareshield projects over the instrument panel to reduce reflections on the windshield from lighted equipment and to shield the panel equipment from glare.

Pilot Instrument Panel Arrangement

Overview

The pilot instrument panel consists of two flight displays (GDUs) – the Primary Flight Display (PFD) and Multi Function Display (MFD) – and two Garmin Touch Screen Controllers (GTCs). The PFD, installed directly in front of the pilot, is intended to be the primary display of flight parameter information (attitude, airspeed, heading, and altitude). The MFD, installed to the right of the PFD, provides supplemental situational and navigation information to the pilot. The center instrument panel, installed between the PFD and MFD, includes the DISPLAY BACKUP push button and baro knob. The GTCs are pilot selectable to be either the Primary Flight Window (PFW) controller, Multi Function Window (MFW) controller (for GTC 1 only), or NAV/COM controller. GTC 1 reverts to the standby flight display when in display reversionary or backup mode.

The engine knob and starter button are located on the left side of the PFD. Instrument panel air vents are located on the outboard sections of the panel.

The interior lighting mode switch is located on the pilot side panel. Instrument lights and micro spot lights are controlled by the dimmer knob on the bolster switch panel. Convenience and accent lights are controlled by the lighting controller, and crew task lights are controlled by an adjacent knob at the light assembly.

A fire extinguisher is mounted at the RH lower valence panel, in front of the co-pilot seat.

Serials w/ Safe Return Autoland: A button to reset the brakes after a Safe Return Autoland landing is located on pilot side lower valence panel.

Operation

For specific operation details, refer to the applicable system.

Center Console Arrangement

Overview

A center console contains the autopilot controls, flap system control, fuel pump switch, fuel selector valve, Automatic Fuel Selector System (AFSS), environmental system controls, power and mixture levers, headset jacks, and USB power. The system circuit breakers, alternate static source valve, ELT panel switch, and starter disable switch are located on the left side of the center console. A storage compartment and emergency egress hammer are installed inside the console armrest.

Serials 9750 thru 10614: A friction knob for adjusting throttle and mixture control feel and position stability is located on the right side of the console.

Operation

For specific center console control operation details, refer to the applicable system.

Figure 3-1: Instrument Panel and Console (1 of 2)

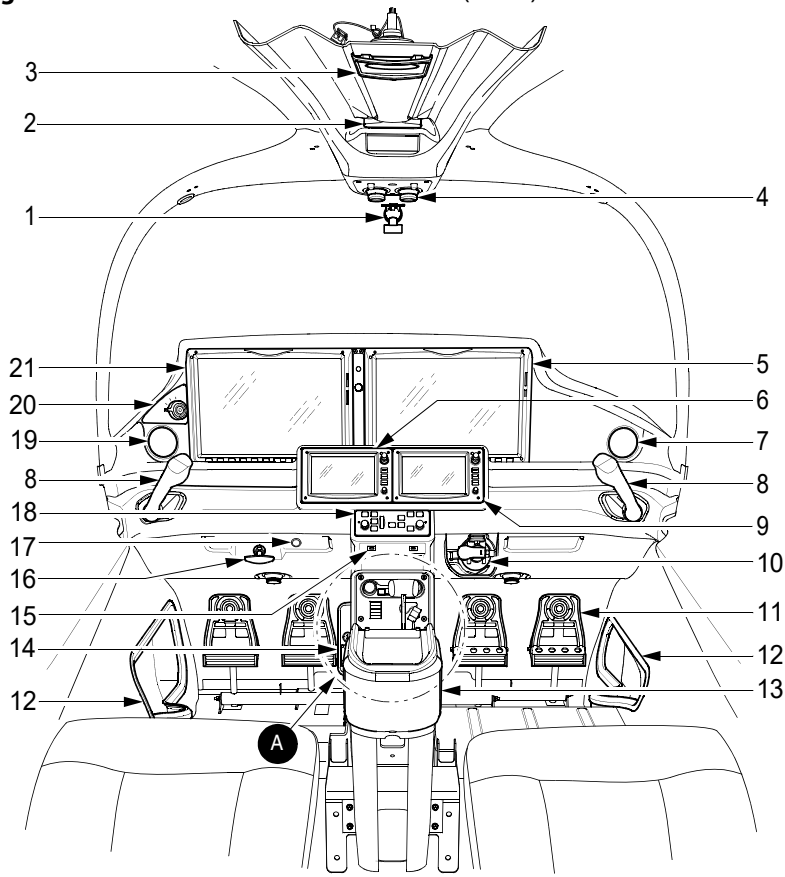

LEGEND

1. Magnetic Compass (if installed)
2. CAPS
3. Safe Return Autoland Panel (if installed)
4. Task Lights
5. MFD
6. GTC 1 / SFD
7. RH Fresh Air Vent
8. Side Stick
9. GTC 2
10. Fire Extinguisher
11. Rudder Pedals
12. Side Storage Compartment
13. Center Storage Compartment
14. Left Side Console
    - ELT Remote
    - Starter Disable Switch
    - Alternate Static Source
15. USB Ports
16. Parking Brake
17. Brake Reset (if installed)
18. AFCS Mode Control Panel
19. LH Fresh Air Vent
20. Engine Start and Ignition Control
21. PFD

SR22_PM03_1018A

Figure 3-1: Instrument Panel and Console (2 of 2)

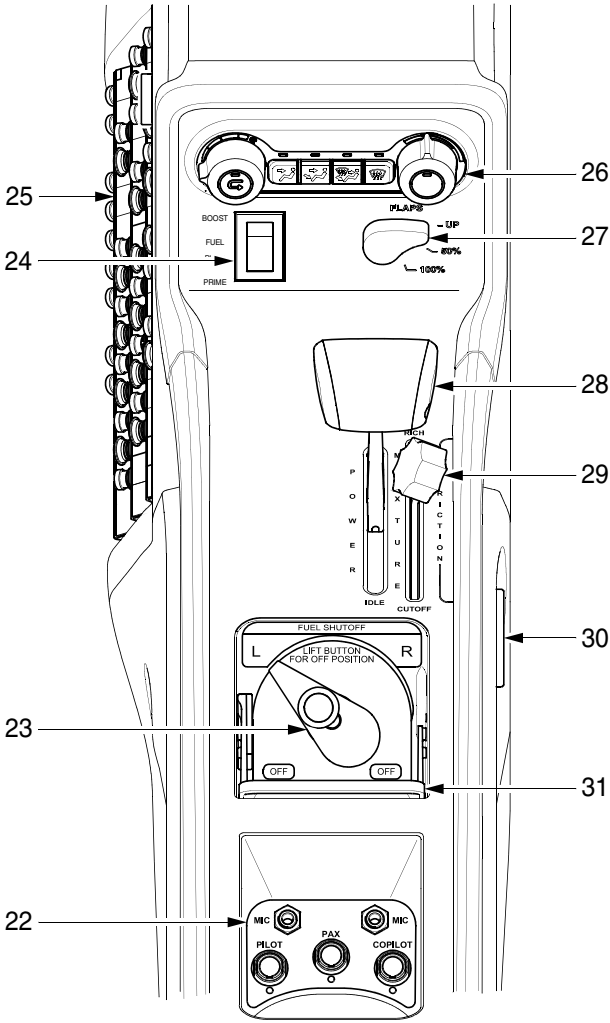

LEGEND

22. Audio Jacks
23. Fuel Tank Selector
24. Fuel Pump Switch
25. Circuit Breaker Panel
26. ECS Controls
27. Flap Selector Switch
28. Throttle
29. Mixture Lever
30. Friction Knob (if installed)
31. Fuel Selector Cover (Open Position)

DETAIL A

SR22_PM03_1019A

Bolster Panel Arrangement

Overview

A switch panel located in the bolster below the instrument panel contains switches and controls for the batteries (BAT 1 and BAT 2), alternators (ALT 1 and ALT 2), exterior lighting (STRB, LAND, and ICE), oxygen (OXY), ice protection (ON/HIGH/MAX, BKUP, and W/S), instrument panel dimmer knob (INST LIGHTS), and checklist thumbwheel (CHECK-LIST).

Serials 9750 thru 10614: A switch is present for pitot tube and lift transducer heat (PROBE HEAT).

Serials 10615 and subs: Pitot tube and lift transducer heat are automatically controlled via avionics.

Operation

For specific bolster switch operation details, refer to the applicable system.

Power Source

For specific bolster switch power source details, refer to the applicable system.

Figure 3-2: Bolster Switch Panel Arrangement

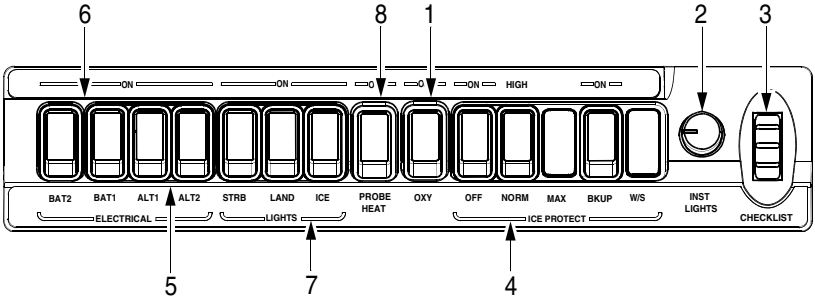

LEGEND

1. Oxygen Switch (if installed)
2. Instrument Panel Dimmer Knob
3. Checklist Thumbwheel
4. Ice Protection Switches (if installed)
5. Alternator Switches
6. Battery Switches
7. Exterior Lights Switches
8. Probe Heat Switch (*Serials 9750 thru 10614*)

SR22_PM03_1023A

Engine Start and Ignition Control Arrangement

Overview

The engine start controls are located on the left side of the instrument panel and contains the following:

- Engine PUSH TO START button
- Engine knob (OFF/RIGHT/LEFT/BOTH)

Operation

For specific center console control operation details, refer to Chapter 9: Powerplant, "Ignition and Starter System".

Figure 3-3: Engine Start Control Arrangement

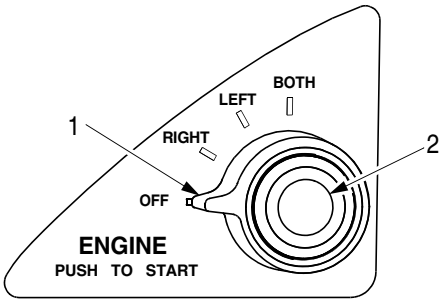

LEGEND
1. Engine Knob
2. Engine Start Button

SR22_PM03_1026

Center Console Switch Panel

Overview

The CCSP is located below the center instrument panel and contains the following:

- Environmental System Controls
- Fuel Pump Switch
- Flaps Selector Switch

Operation

For specific CCSP operation details, refer to the applicable system.

Figure 3-4: Center Console Switch Panel

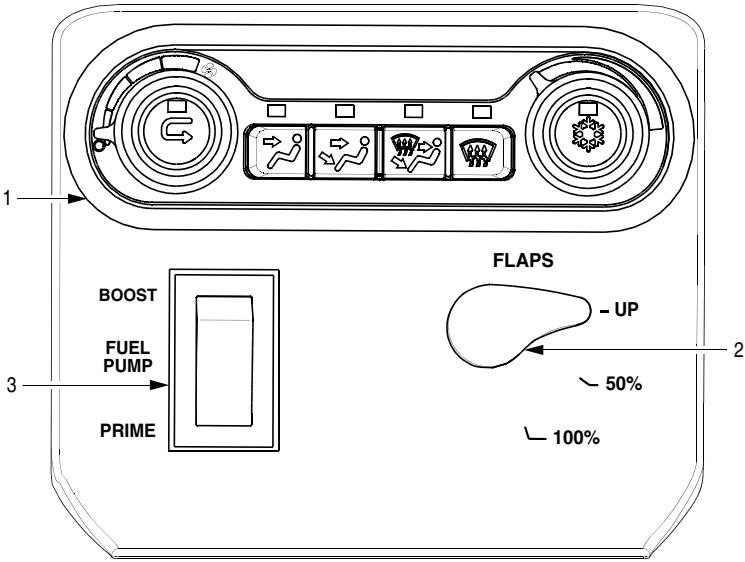

LEGEND
1. Enviromental System Controls
2. Flap Selector Switch
3. Fuel Pump Switch

SR22_PM03_1029

System Circuit Breaker Panel Arrangement

Overview

System circuit breakers are located on the left side of the center console. For specific information about system circuit breaker locations, refer to "Figure 11-2: Circuit Breaker Panel".

Operation

For specific pilot actions in response to System Annunciations, refer to Section 3: Emergency Procedures and Section 3A: Abnormal Procedures in the AFM.

Safe Return Autoland Panel Arrangement (If Installed)

Overview

Safe Return Autoland panel is located aft of CAPS panel. Refer to "Figure 20-1: Safe Return Autoland".

Operation

For specific Safe Return Autoland operation details refer to Chapter 20: Safe Return Autoland (Optional), "Safe Return Autoland (If Installed)"

Intentionally Left Blank

Chapter 4: Flight Instruments

Table of Contents

Flight Instruments 3
Attitude Indicator 6
Overview 6
Operation 6
Airspeed Indicator 6
Overview 6
Operation 6
Altimeter 7
Overview 7
Operation 7
Horizontal Situation Indicator 8
Overview 8
Operation 8
Vertical Speed Indicator 8
Overview 8
Operation 8
Standby Flight Display 9
Overview 9
Operation 9
Power Source 10
Magnetic Compass (If Installed) 10
Overview 10

Intentionally Left Blank

Flight Instruments

Flight instruments and annunciations are displayed on the Primary Flight Display (PFD) located directly in front of the pilot in normal mode, and on the Multi Function Display (MFD) in reversionary mode. The primary flight instruments are arranged in the conventional basic "T" configuration. Standby instruments for airspeed, attitude, and altitude are displayed on GTC 1 (mounted on the LH bolster panel) by selecting the DISPLAY BACKUP push button on the center instrument panel. The primary and standby flight instruments utilize separate power sources.

There are softkeys on the bottom of the PFD and the MFD. On the PFD, these can be used at any time. On the MFD, these can be used only when in reversionary mode.

Refer to Chapter 17: Avionics, "Cirrus Perspective Touch+ Avionics System" for more details.

For additional information on PFD and MFD operation, refer to Cirrus Perspective Touch+ Integrated Avionics System Pilot's Guide.

Figure 4-1: Primary Flight Instruments (1 of 2)

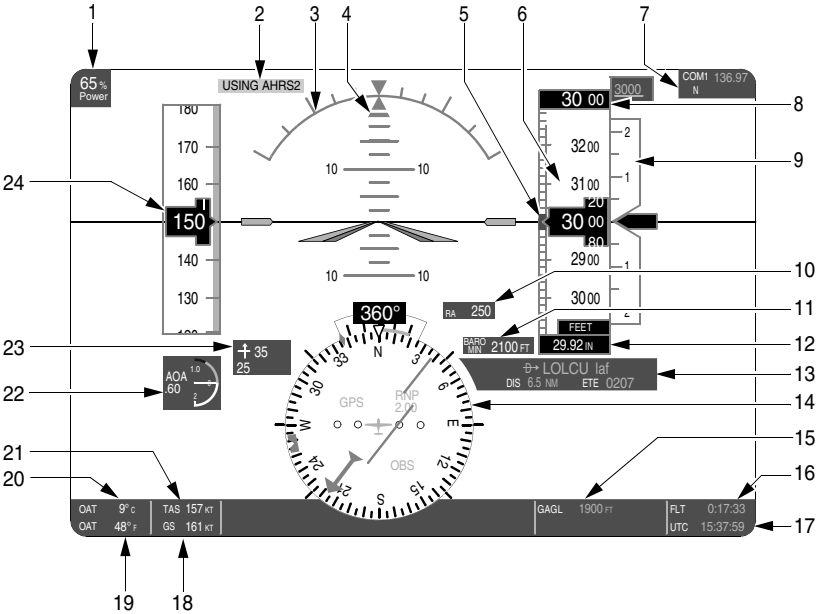

LEGEND

1. Percent Power
2. Reversionary Sensor Annunciation
3. Attitude Indicator
4. Slip Skid Indicator
5. Selected Altitude Bug
6. Altimeter
7. Flight ID
8. Selected Altitude
9. Vertical Speed Indicator (VSI)
10. Radar Altimeter
11. Minimum Descent Altitude/Decision Height
12. Barometric Altimeter Setting
13. Navigation Status Box
14. HSI
15. GPS AGL Altitude
16. Flight Timer
17. System Time
18. Ground Speed
19. Outside Air Temperature (F°)
20. Outside Air Temperature (C°)
21. True Airspeed
22. Angle of Attack
23. Wind Data
24. Indicated Airspeed

SR22_PM04_1033A

Figure 4-1: Primary Flight Instruments (2 of 2)

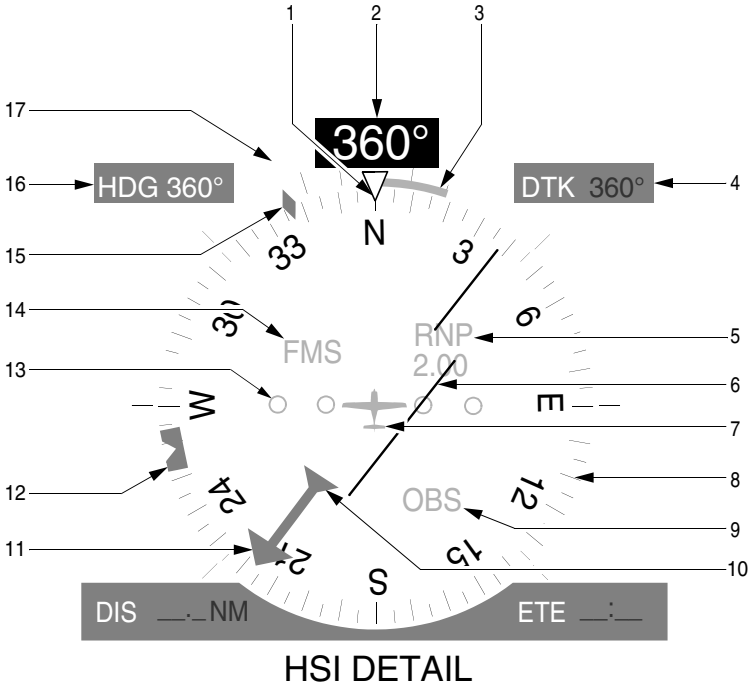

HSI DETAIL

LEGEND

1. Lubber Line
2. Current Heading
3. Turn Rate and Heading Trend Vector
4. Selected Course
5. Flight Phase
6. Course Deviation Indicator (CDI)
7. Aircraft Symbol
8. Rotating Compass Card
9. OBS Mode Active
10. To/From Indicator
11. Course Pointer
12. Selected Heading Bug
13. Lateral Deviation Scale
14. Navigation Source
15. Current Track Indicator
16. Selected Heading
17. Turn Rate Indicator

SR22_PM04_1127

Attitude Indicator

Overview

The primary attitude indicator is shown on the upper center of the PFD and displays pitch, roll, and slip/skid information provided by the Air Data, Attitude, and Heading Reference System (ADAHRS).

Operation

Above and below the horizon line, major pitch marks and labels are shown for every 5°, up to 80°. Between 25° below and 45° above the horizon line, the pitch index scale is graduated in 5° increments with every 10° of pitch labeled. Between 20° below and 20° above the horizon line, minor pitch marks occur every 2.5°. If pitch limits are exceeded in either the nose-up or nose-down attitude, red warning chevrons will appear and point the way back to level flight. The roll index scale is graduated with major tick marks at 30° and 60° and minor tick marks at 10°, 20°, and 45°. The roll pointer is slaved to the airplane symbol. The slip-skid indicator is the bar beneath the roll pointer. The indicator moves with the roll pointer and moves laterally away from the pointer to indicate lateral acceleration. Slip/skid is indicated by the location of the bar relative to the pointer. One bar displacement is equal to one-half ball displacement on a traditional slip/skid indicator.

Additionally, a standby attitude indicator is provided by the standby attitude source. In certain scenarios, the standby attitude indicator is displayed automatically. It can be viewed at anytime by selecting the DISPLAY BACKUP push button on the center instrument panel.

Airspeed Indicator

Overview

Primary airspeed data is provided by an Air Data Computer (ADC) and is shown as a vertical tape along the upper left side of the PFD.

Additionally, a standby airspeed indicator is provided by the standby air data source. In certain scenarios, the standby airspeed indicator is displayed automatically. It can be viewed at anytime by selecting the DISPLAY BACKUP push button on the center instrument panel.

Operation

The airspeed scale is graduated with major tick marks at intervals of 10 knots and minor tick marks at intervals of 5 knots. Speed indication starts at 20 knots, with 60 knots of airspeed viewable at any time. The actual airspeed is displayed inside the black pointer. The pointer remains black until reaching the never-exceed speed (V_{NE}), at which point it turns red. Color coded bars are provided to indicate flap operating range, normal operating range, caution range, and never-exceed speed. Speeds above the

never-exceed speed, appear in the high speed warning range, represented on the airspeed tape by red/white "barber pole" coloration. Calculated true airspeed is displayed in a window on the bottom LH side of the PFD. Airspeed trend is also displayed as a magenta bar along side of the airspeed tape.

Altimeter

Overview

Primary altitude data is provided by an ADC and is shown as a vertical tape along the upper right side of the PFD. The altimeter scale is graduated with major tick marks at intervals of 100 feet and minor tick marks at intervals of 20 feet. Six hundred (600) feet of barometric altitude is viewable at any time.

• **NOTE** •

To change altimeter barometric pressure setting units and/or to display selected attitude in meters, refer to Cirrus Perspective Touch+ Avionics System Pilot Cockpit Reference Guide.

Additionally, a standby altimeter indicator is provided by the air data source available for display on GTC 1 by selecting the DISPLAY BACKUP push button on the center instrument panel.

Operation

The local barometric pressure is set using the barometric adjustment knob on the center instrument panel. The selectable altitude reference bug is displayed on the altimeter tape and is set using the altitude selection knob on the GMC 707. Barometric minimum descent altitude (MDA, or Decision Height, DH, can be preset. Altimeter trend is also displayed as a magenta bar along side of the altimeter tape.

The PFD Altitude is corrected for static source position error (normal static source/flaps UP), the altitude calibration errors for the PFD are zero with flaps up and normal source (typical cruise flight). Calibration corrections are only necessary when flaps are extended or the alternate static source is selected.

Horizontal Situation Indicator

Overview

The Horizontal Situation Indicator (HSI) is displayed along the lower center of the PFD. Heading data is provided by ADAHRS and the onboard magnetometers. The HSI displays a rotating compass card in a heading-up orientation. Letters indicate the cardinal points and numeric labels occur every 30°. Major tick marks are at 10° intervals and minor tick marks at 5° intervals. Reference index marks are provided at 45° intervals around the compass card. A circular segment scale directly above the rotating compass card shows half and standard rates of turn based on the length of the turn rate trend vector.

Operation

The HSI presents heading, turn rate, course deviation, bearing, and navigation source information in a 360° compass-rose format. The HSI contains a Course Deviation Indicator (CDI) with a course pointer arrow, a To/From arrow, a sliding deviation bar, and scale. The course pointer is a single line arrow (GPS, VOR1, and LOC1) or a double line arrow (VOR2 and LOC2) which points in the direction of the set course. The To/From arrow rotates with the course pointer and is displayed when the active NAVAID is received.

The HSI heading reference bug is set using the HDG select knob on the GMC 707. The selected heading is displayed in a window above the upper LH 45° index mark and will disappear approximately 3 seconds after the HDG select knob stops turning.

The Course Deviation Indicator (CDI) navigation source shown on the HSI is set using a touchscreen controller to select GPS, NAV1, or NAV2 inputs via PFW Home. The course pointer is set using the dual concentric knob (DCK) on a touchscreen controller. The selected course is displayed in a window above the upper RH 45° index mark and will disappear approximately 3 seconds after the CRS select knob stops turning.

Vertical Speed Indicator

Overview

Vertical speed data is provided by an ADC and is shown as a vertical tape along the right side of the altimeter on the PFD. The VSI scale is graduated with major tick marks at 1000 and 2000 fpm in each direction and minor tick marks at intervals of 500 fpm.

Operation

The vertical speed pointer moves up and down the fixed VSI scale and shows the rate of climb or descent in digits inside the pointer. A reference notch at the RH edge of the scale indicates 0 feet/min.

Vertical speed must exceed 100 feet/min before digits will appear in the VSI pointer. If the rate of ascent/descent exceeds 2000 fpm, the pointer appears at the corresponding edge of the tape and the rate appears inside the pointer.

Standby Flight Display

Overview

The Standby Flight Display System provides a secondary means to display airspeed, altitude, and attitude information to the pilot in the case of primary ADAHRS or display system failures.

Serials 9750 thru 10614, and Serials 10615 and subs w/ triple ADAHRS: Attitude and airspeed indications are provided by the remote MD302 standby attitude source and displayed on GTC 1 when in SFD Mode.

Serials 10615 and subs w/ dual ADAHRS: Standby attitude, heading, and airspeed data are provided by the GI 275 and are displayed on GTC 1 when in SFD Mode.

Operation

The Standby Flight Display (SFD) appears on GTC1 when there is a loss of all primary ADAHRS information, a loss of the PFD, or when all valid ADC or AHRS sensors are miscompared.

Once the failure condition(s) are resolved, GTC1 may be returned to normal operation by twice pressing the red Display Backup Button mounted between the PFD and MFD.

For additional SFD operational details, refer to Cirrus Perspective Touch+ Avionics System Pilot's Guide.

Standby Airspeed Indicator

The standby airspeed indicator displays the current indicated airspeed (IAS). The digits of the display are enlarged for visibility and increment by one (1) unit. The units will scroll to assist in quick reference as to the increasing or decreasing nature of the aircraft's airspeed. Airspeed units are always in knots (Kts).

Standby Altimeter

The standby altimeter displays the altitude and the barometric pressure.

The altitude window displays the current, barometric corrected altitude. The display will scroll to assist in quick reference as to the increasing or decreasing nature of the aircraft's altitude. Altitude is displayed in feet, but may also be shown in meters. Metric display is pilot-selectable via the touchscreen softkey bezel button.

The barometer window shows the currently set barometric pressure located at the bottom of the altitude tape. Setting the current barometric pressure compensates the altitude for the appropriate environmental conditions. When the LH touchscreen controller is transitioned to the standby flight display, the current barometric setting from the PFD syncs to the standby flight display. The barometric setting for the standby display can then be further adjusted by simply turning the bottom knob on GTC 1. Barometric pressure units are displayed in inches of mercury (inHg), but may also be displayed in millibars (mb) via the pilot-selectable softkey bezel button on GTC 1.

Standby Attitude Indicator

The attitude indicator gives backup indication of flight attitude. Bank attitude is indicated by a pointer at the top of the indicator relative to the roll scale with index marks at 0°, 10°, 20°, 30°, 45°, and 60° either side of the center mark. A fixed symbolic airplane superimposed over a movable mask containing a representative white horizon line, which divides the mask into two sections, indicates pitch and roll attitudes. The upper blue "sky" section and the lower brown "ground" sections have pitch reference lines useful for pitch attitude control.

The slip indicator portion of the display will always appear at the top of the attitude display, below the roll pointer. Indicator behavior is the same as that found on the PFD.

Display of data from the sensor is available on GTC 1 by pressing the DISPLAY BACKUP push button located on the center instrument panel between the PFD and MFD. Standby flight display can also be presented automatically for certain sensed situations, if the system decides it is warranted.

Power Source

Serials 9750 thru 10614, and Serials 10615 and subs w/ triple ADAHRS: 28 VDC for standby attitude module operation is provided through the 5-amp STNDBY ATT A circuit breaker on Essential Bus 1 and through the 5-amp STNDBY ATT B circuit breaker on Main Bus 2.

Serials 10615 and subs w/ dual ADAHRS: 28 VDC for standby attitude source operation is provided through the 5-amp ADAHRS 2 circuit breaker on Main Bus 2.

Magnetic Compass (If Installed)

Overview

A conventional, internally lighted, liquid filled, magnetic compass is installed on the windshield. A compass correction card is installed with the compass.

Chapter 5: Wing Flaps

Table of Contents

Wing Flaps 3
Flap Control System 3
Overview 3
Operation 5
Controls 5
Indications 7
Power Source 7
Alerts 8

Intentionally Left Blank

Wing Flaps

Flap Control System

Overview

The electrically controlled, single-slotted flaps provide low-speed lift enhancement. Each flap is manufactured of aluminum and connected to the wing structure at three hinge points. Rub strips are installed on the top leading edge of each flap as an intentional wear item between the flap and wing flap cove.

Figure 5-1: Wing Flaps

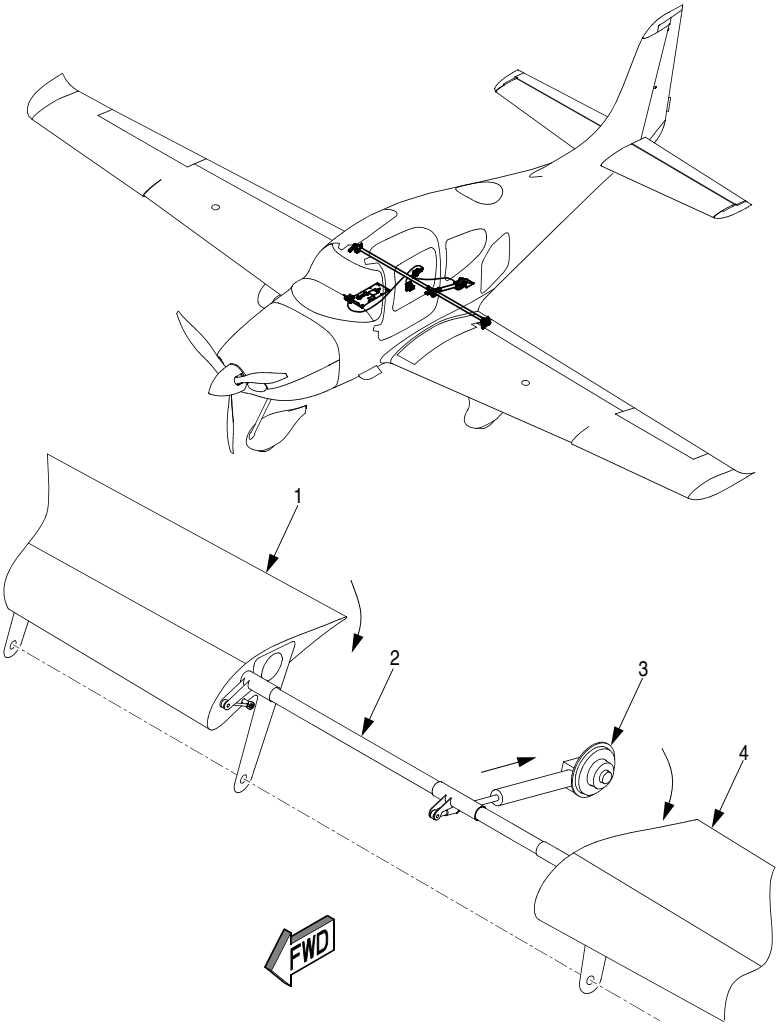

LEGEND

1. RH Flap
2. Torque Tube
3. Flap Actuator
4. LH Flap

SR22_PM05_1035

Operation

The flaps are selectively set to three positions: UP, 50%, and 100% by operating the flaps selector switch. The flaps selector switch positions the flaps through a motorized linear actuator mechanically connected to both flaps by a torque tube. Proximity switches on the actuator limit flap travel to the selected position and provide position indication. The Garmin avionics monitors the flap actuator position sensors and the flaps selector switch to control flap positions.

The wing flap inhibit system monitors sensed flap position and commanded flap position. This feature prevents the flaps from extending or retracting according to the aircraft's airspeed.

If the flap overspeed or underspeed limits are exceeded while a new flap position is selected or while the flaps are in motion and prior to reaching the selected flap position, the flap inhibit system will prevent flap motion until the FLAPS AIRSPEED INHIBIT Caution CAS message is cleared.

Controls

Flaps are manually controlled using the airfoil-shaped flaps selector switch located on the CCSP. The selector switch is marked and has detents at three positions: UP, 50%, and 100%. Setting the switch to the desired position will cause the flaps to extend or retract to the appropriate setting.

Serials w/ Safe Return Autoland: Flaps are automatically controlled via the avionics during an autoland event.

Figure 5-2: Flaps Selector Switch

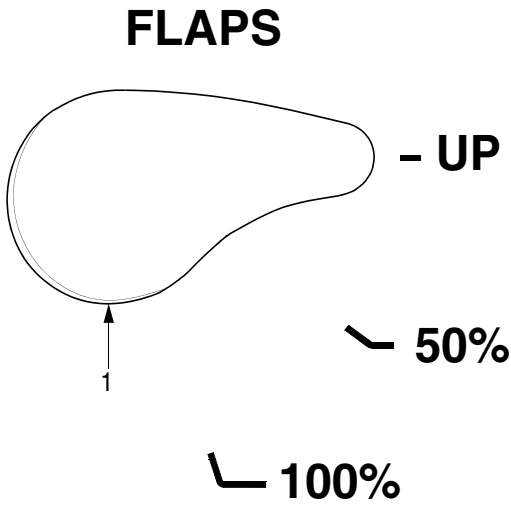

LEGEND

1. Flaps Selector Switch

SR22_PM05_1038

Indications

Flap position is indicated in the left side of the MFD on the Engine Indication System (EIS) section displayed as UP, 50%, and 100%.

Selected flap position is highlighted in a cyan box. When the flaps reach a given position the text is highlighted green and the flap symbol is colored cyan. The flap symbol turns white when the flaps are in an intermediate position. The flap symbol will turn amber under certain failure conditions.

The maximum flap extended speed (V_{FE}) for the adjacent flap setting will be displayed directly below the flap widget.

Figure 5-3: Flaps Indication

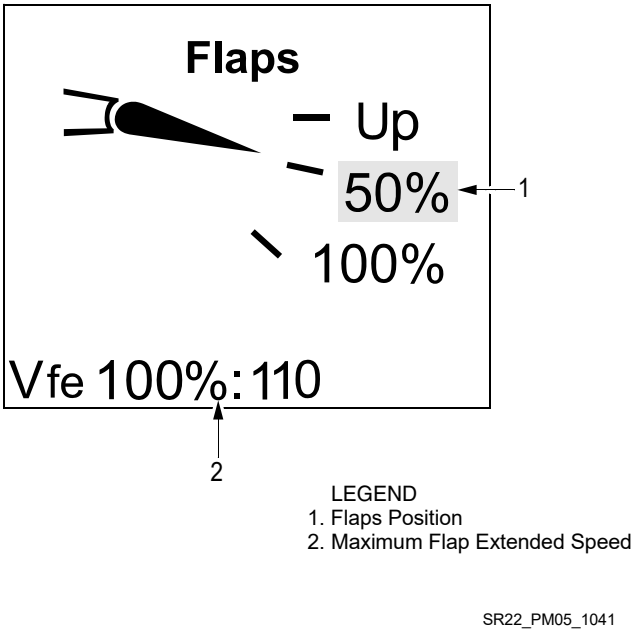

Power Source

The wing flaps actuator and flap control switch are powered by 28 VDC through the 10-amp FLAPS circuit breaker on Non-Essential Bus.

Alerts

A FLAPS AIRSPEED INHIBIT Caution CAS message will be displayed, and flaps will not actuate, under the following conditions:

- Airspeed is less than 74 KIAS, and flaps are then selected to 0%.
- Airspeed is less than 70 KIAS or greater than 150 KIAS, and flaps are then selected to 50%.
- Airspeed is greater than 110 KIAS, and flaps are then selected to 100%.

Selected flap position is highlighted in a cyan box. When the flaps reach a given position the text is highlighted green and the flap symbol is colored cyan. The flap symbol turns white when the flaps are in an intermediate position. The flap symbol will turn amber under certain failure conditions.

The maximum flap extended speed (V_{FE}) for the adjacent flap setting will be displayed directly below the flap widget.

• **NOTE** •

For specific pilot actions in response to System Annunciations, refer to Section 3: Emergency Procedures and Section 3A: Abnormal Procedures in the AFM.

Chapter 6: Landing Gear

Table of Contents

Landing Gear 3
Main Gear 3
Overview 3
Nose Gear 3
Overview 3
Brake System 3
Overview 3
Operation 4
Indications 4
Alerts 4

Intentionally Left Blank

Landing Gear

Main Gear

Overview

The main landing gear are bolted to composite wing structure between the wing spar and shear web. The landing gear struts are constructed of composite material for fatigue resistance. The main wheels and wheel pants are bolted to the struts. Each main gear wheel has a 15 x 6.0 x 6 tubeless tire installed. Standard wheel pants are removable to provide access to tires and brakes. Access doors in the wheel pants allow tire inflation and pressure checking. Each main gear wheel is equipped with an independent, hydraulically operated single cylinder, dual piston, disc brake.

Nose Gear

Overview

The nose gear strut is of tubular steel construction and is attached to the steel engine mount structure. Nose gear shock absorption is provided by an oleo strut. The nose wheel is free castering and can turn through an arc of approximately 170 degrees (85 degrees either side of center). Steering is accomplished by differential application of individual main gear brakes. The nosewheel has a 5.0 x 5 tubeless tire installed.

Brake System

Overview

The main wheels have hydraulically operated, single-disc type brakes, individually activated by floor mounted toe pedals at both pilot stations. A parking brake mechanism holds induced hydraulic pressure on the disc brakes for parking. The brake system consists of a master cylinder for each rudder pedal, a hydraulic fluid reservoir, a parking brake valve, a single disc brake assembly on each main landing gear wheel, and associated hydraulic plumbing and wiring.

The main wheel brakes are set for parking by using the parking brake handle near the pilot's knees. Brake lines from the toe brakes to the main wheel brake calipers are plumbed through a parking brake valve.

• **NOTE** •

Serials w/ Safe Return Autoland: The automatic brake system is designed to activate only when Safe Return Autoland has been activated and subsequently completed touchdown. The automatic brake system is inhibited at high power settings to prevent activation during takeoff.

Operation

Braking pressure is initiated by depressing the top half of a rudder pedal (toe brake). The brakes are plumbed so that depressing either the pilot's or copilot's left or right toe brake will apply the respective (left or right) main wheel brake. The reservoir is serviced with MIL-PRF-87257 hydraulic fluid.

Brake system malfunction or impending brake failure may be indicated by a gradual decrease in braking action after brake application, noisy or dragging brakes, soft or spongy pedals, excessive travel, and/or weak braking action.

Should any of these symptoms occur, immediate maintenance is required. If, during taxi or landing roll, braking action decreases, let up on the toe brakes and then reapply the brakes with heavy pressure. If the brakes are spongy or pedal travel increases, pumping the pedals may build braking pressure.

• CAUTION •

Do not set the parking brake in flight. If a landing is made with the parking brake valve set, tire damage may occur.

To apply the parking brake, set desired brake pressure with the rudder-pedal toe brakes, and then pull the parking brake handle aft. To release the parking brake, push the handle in.

Indications

The parking brake position status is displayed on the Status & Info Synoptic Page. When the parking brake is applied, the SET status is shown in black text with an amber background below the "Parking Brake" gray label.

Alerts

An alert indicates in the CAS window on the PFD when the parking brake is set.

Chapter 7: Seats

Table of Contents

Seats 3
Crew Seats 3
Overview 3
Operation 3
Controls 3
Passenger Seats 5
Overview 5
Operation 5
Controls 5
Seat Belt and Shoulder Harness 7
Overview 7
Operation 7
Inflatable Restraints 8
Overview 8
Operation 8
Child Restraint System 8
Overview 8
Operation 9

Intentionally Left Blank

Seats

Crew Seats

Overview

This airplane has two individual front crew seats. The front seats are adjustable fore and aft, and the seat backs can be reclined for passenger comfort or folded forward for rear seat access. Integral headrests are provided.

Operation

• CAUTION •

Do not kneel or stand on the seats or damage to the energy absorption materials in the seat bottoms may occur.

The fore and aft travel path is adjusted through the seat position control located below the forward edge of the seat cushion. The seat track is angled upward for forward travel so the seat will be positioned slightly higher as the seat moves forward. The seat backs can be reclined for pilot comfort or folded forward for rear seat access. Integral headrests are provided. Recline position is controlled through levers located on the side of the seat backs.

Controls

Recline position is controlled through levers located on each side of the seat backs.

To position front seat fore and aft

1. Grab the hand hold below the bolsters.
2. Lift the position control handle.
3. Slide the seat into position.
4. Release the handle and check that the seat is locked in place. Shifting the seat forward/backward can help verify the seat is locked in place.

To adjust recline position

1. Actuate and hold the seat back control lever.
2. Position the seat back to the desired angle.
3. Release the control lever.

Figure 7-1: Crew Seats

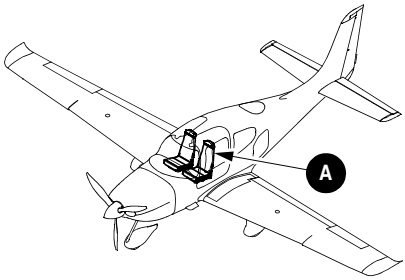

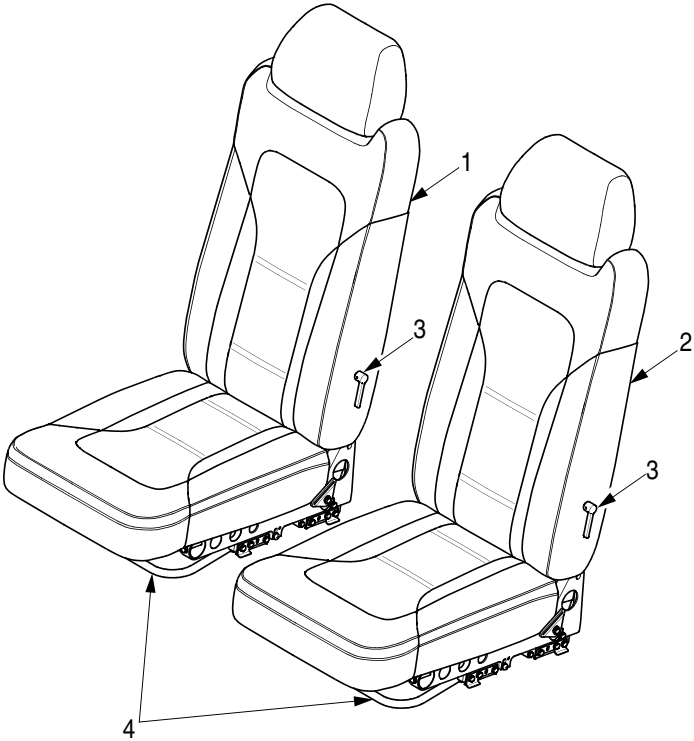

LEGEND
1. Co-pilot Seat
2. Pilot Seat
3. Seat Back Control Lever
4. Position Control Handle

DETAIL A

SR22_PM07_1044

Passenger Seats

Overview

The rear seats employ a one-piece bench seat and two seat backs configured in 60/40 split. This "2+1" seating configuration provides for a center seat/restraint area for a third passenger on the wider left hand seat.

Operation

• CAUTION •

Do not kneel or stand on the seats or damage to the energy absorption materials in the seat bottoms may occur.

Each seat back reclines independently of each other and can be folded forward to provide a semi-flat surface for cargo extending forward from the baggage compartment.

Controls

Recline position is controlled through a lever located on either side of the seat.

To fold seat back forward

1. With no pressure on the seat back, rotate the lever to the recline position and fold the seat back forward.

Figure 7-2: Rear Seats Location

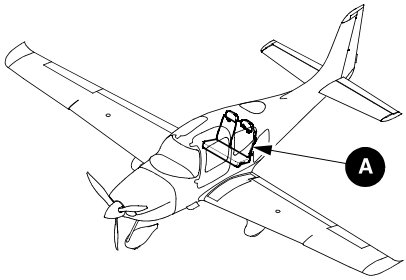

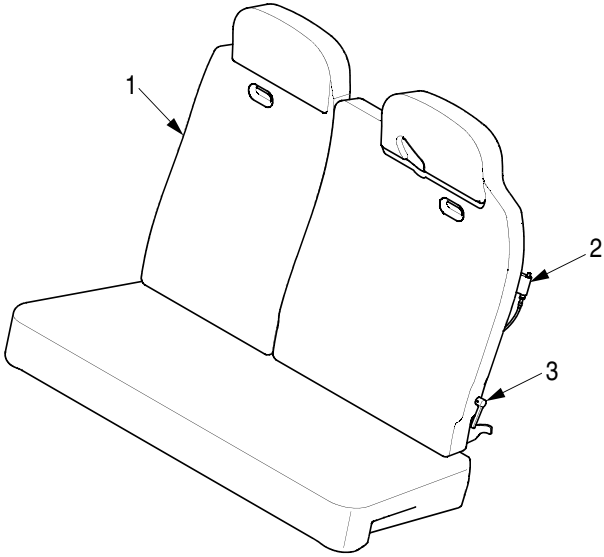

DETAIL A

LEGEND
1. Passenger Seats
2. Recline Lock Mechanism
3. Seat Back Control Lever

SR22_PM07_1047

Seat Belt and Shoulder Harness

Overview

Integrated seat belt and shoulder harness assemblies with inertia reels are provided for the pilot and each passenger.

Seats belts must be worn and tightened snug and low on the waist. The seat belts are designed to accommodate an approximately 5th percentile female and 95th percentile male. Those outside this range need to ensure the lap belt is securely tightened and there is sufficient room to maneuver around with the shoulder harness secured.

The front seats use a four-point inflatable restraint system. Forward seat belts are attached to the seat frame. The shoulder harnesses are attached to inertia reels mounted in the seat back.

The rear seats use a three-point safety harness consisting of one shoulder harness and a lap belt. The rear seat belts are attached to fittings on the cabin floor. The shoulder harnesses are attached to inertia reels mounted to the baggage compartment rear bulkhead.

The inertia reels allow complete freedom of movement of the occupant's upper torso. In the event of a sudden deceleration, the reels lock automatically to protect the occupants. It is recommended that the seat belts be stowed in the latched position when not in use.

• WARNING •

Ensure that no twists exist anywhere on the belt and that no slack exists between the occupant's shoulder and the shoulder harness. Failure to do so could prevent the occupant from being properly restrained, which could cause injury.

Operation

To use forward restraints

1. Slip arms behind the harness so that the harness extends over shoulders.
2. Hold the buckle and firmly insert the link.
3. Grasp the seat belt tabs outboard of the link and buckle and pull to tighten. Buckle should be centered over hips for maximum comfort and safety.
4. Restraint harnesses should fit snug against the shoulder.

To use aft restraints

1. Slip arm into the harness so that the harness extends over the occupant's respective shoulder.
2. Hold the buckle and firmly insert the link.
3. Tighten lap belt by pulling excess shoulder belt through the tongue.
4. Ensure lap belt is snug.

To release forward restraints

1. Grasp the top of the buckle opposite the link and pull outward. The link will slip free of buckle.
2. Slip arms from behind the harness.

To release aft restraints

1. Press button on buckle. The tongue will slip free of the buckle.
2. Slip arm from behind the harness.

Inflatable Restraints

Overview

An inflatable shoulder harness is integral to each front seat harness. The electronic module assembly, mounted below the cabin floor, contains a crash sensor, battery, and related circuitry to monitor the deceleration rate of the airplane.

Operation

In the event of a crash, the sensor evaluates the crash pulse and sends a signal to an inflator assembly mounted to the aft seat frame. This signal releases the gas in the inflator and rapidly inflates the airbag within the shoulder harness cover. After airbag deployment, the airbag deflates to enable the pilot/co-pilot to egress the airplane without obstruction.

The crash sensor's predetermined deployment threshold does not allow inadvertent deployment during normal operations, such as hard landings, strikes on the seat, or random vibration.

Child Restraint System

Overview

The aircraft is equipped with provisions for installing two LATCH compliant child seats in the outboard rear seat positions, OR one non-LATCH compliant seat in the center rear seat position.

Lower anchors for the LATCH compliant seats are located in the outboard seat positions. The non-LATCH compliant seat must be installed using the center seat belt. Three top tether anchors for the child seats are located on the rear bulkhead.

Operation

To install child seat

1. Fasten lower seat attachments to bench seat:
   a LATCH Compliant Outboard Seat: Fasten lower seat attachment to the outboard anchors in the bench seat.
   b Non-LATCH Compliant Center Seat: Using the center seat belt, fasten lower seat attachments to the bench seat as described by the manufacturer's instructions.
2. Locate top tether pass-through - a narrow slit in the seat back upholstery - near the top, outboard section of the seat back.

• WARNING •

Do not route child seat top tether over or around seat back. The top tether must be routed through the seat back pass-through for the child seat to function properly.

3. Route child seat's top tether through the seat back pass-through.
4. Fasten top tether to rear bulkhead anchor.
5. Firmly tension the child seat straps according to the manufacturer's instructions.

Intentionally Left Blank

Chapter 8: Doors and Windows

Table of Contents

Doors and Windows 3
Cabin Doors 3
Overview 3
Operation 3
Control 3
Indications 3
Baggage Compartment Door 3
Overview 3
Operation 4
Control 4
Indications 4
Baggage Tie-Downs/Cargo Net 4
Overview 4
Emergency Egress Hammer 5
Overview 5
Operation 5
Remote Keyless Entry (If Installed) 5
Overview 5
Operation 5

Intentionally Left Blank

Doors and Windows

Cabin Doors

Overview

Two large forward hinged doors allow crew and passengers to enter and exit the cabin. The door handles use two over center latches that engage a striker pin on the fuselage door opening. Gas charged struts provide assistance in opening the doors. Front seat armrests are integrated with the doors. Unique keys are provided for the fuel caps, baggage door, and engine starter disable switch. The door windows serve as an emergency exit.

Operation

To open doors from outside

1. Rotate handle up until unlatched.
2. Pull door open.

To close door from outside

1. Pull down on the door to close it.
2. Rotate door handle down. The handle will spring back into the pocket.

To open door from inside

1. Rotate door handle up.
2. Push door outside to open.

To close door from inside

1. Pull down on door to close it.
2. Rotate door handle down.

Control

The cabin doors are unlocked or locked from the outside with a key lock or a key fob (if installed). Refer to Chapter 8: Doors and Windows, "Remote Keyless Entry (If Installed)" for more details.

Indications

The cabin door status is displayed on the Status & Info Synoptic Page. The OPEN or CLOSED status is shown in white letters below the "Cabin Door" gray label.

Baggage Compartment Door

Overview

The baggage compartment door, located on the left side of the fuselage aft of the wing, allows entry to the baggage compartment.

The baggage compartment extends from behind the rear passenger seat to the aft cabin bulkhead. The rear seats can be folded forward to provide additional baggage area for long or bulky items.

Operation

To open baggage door

1. Press button at baggage door.
2. Pull baggage door open.

To close baggage door

1. Close and latch baggage door.

Control

The baggage door is unlocked or locked from the outside with a key lock or a key fob (if installed). Refer to Chapter 8: Doors and Windows, "Remote Keyless Entry (If Installed)" for more details.

Indications

The baggage door status is displayed on the Status & Info Synoptic Page. The OPEN or CLOSED status is shown in white letters below the "Baggage Door" gray label.

Baggage Tie-Downs/Cargo Net

Overview

• CAUTION •

If not adequately restrained, baggage compartment items may pose a projectile hazard to cabin occupants in the event of rapid deceleration. Secure all baggage items with tie-down straps or cargo net.

Four baggage tie-down straps are provided with the aircraft to secure items in the baggage compartment. Each strap assembly has a hook at each end and a cam-lock buckle in the middle. The hook ends clip over loop fittings installed in the baggage floor and in the rear bulkhead. The tie-down straps should be stowed attached and tightened to the fittings.

The aircraft is equipped with a retractable cargo net to secure items in the baggage compartment. Integral inertia reels attached to the rear bulkhead allow the cargo net to be extended forward, placed over baggage, and secured to the seat back via four latch assemblies. The cargo net should be stowed attached to the seat back fittings.

The cargo net is not functional when rear seats are folded forward. Use conventional tie-down straps in this configuration.

Emergency Egress Hammer

Overview

A hammer is located in the center armrest.

Operation

In the event where the cabin doors are jammed or inoperable, the hammer may be used to break through the acrylic windows to provide an escape path.

Remote Keyless Entry (If Installed)

Overview

Remote operation of the cabin and baggage door locks is provided by a battery-powered key fob. An electronic key lock is performed with the Convenience System Controller (CSC) which receives signals from a key fob to control door locks using solenoids as their electro-mechanical device to engage locking mechanisms.

Operation

When BAT 1 switch is turned on, the cabin doors will automatically unlock via the door solenoid lockout device. This device will also prevent any further key fob commands to the cabin door while the BAT 1 switch is ON.

When BAT 1 switch is turned on, the baggage door will automatically lock after a 5-minute delay as long as all doors are closed. If any door is open at the end of 5 minutes, the timer will restart.

When BAT 1 switch is turned OFF, all doors will automatically unlock.

The key fob complies with part 15 of the FCC Rules. Operation is subject to the following two conditions:

1. This device may not cause harmful interference.
2. This device must accept any interference received, including interference that may cause undesired operation.

Intentionally Left Blank

Chapter 9: Powerplant

Table of Contents

Powerplant 3
Engine 3
Overview 3
Operation 3
Controls 5
Indications 6
Propeller 9
Overview 9
Operation 9

Intentionally Left Blank

Powerplant

Engine

Overview

The airplane is powered by a Continental Motors IO-550-N, six-cylinder, normally aspirated, fuel-injected engine rated to 310 hp at 2700 RPM. Dual, conventional magnetos provide ignition.

The engine is attached to the firewall by a six-point steel engine mount. The firewall attach points are structurally reinforced with gusset-type attachments that transfer thrust and bending loads into the fuselage shell.

Operation

Engine Lubrication System

The engine is provided with a wet-sump, high-pressure oil system for engine lubrication and cooling. Oil for engine lubrication is drawn from an eight-quart capacity sump through an oil suction strainer screen and directed through the oil filter to the engine-mounted oil cooler by a positive displacement oil pump. The oil pump is equipped with a pressure relief valve at the pump output end to bypass oil back to the pump inlet should the pump exceed limits. The oil cooler is equipped with a temperature control valve set to bypass oil if the temperature is below approximately 180 °F (82 °C). Bypass or cooled oil is then directed through oil galleries to the engine rotating parts and piston inner domes. Oil is also directed to the propeller governor to regulate propeller pitch. The complete oil system is contained in the engine. An oil filler cap and dipstick are located inboard, at the left rear of the engine. The filler cap and dipstick are accessed through a door on the top left side of the engine cowling.

Ignition and Starter System

Two engine-driven magnetos and two spark plugs in each cylinder provide engine fuel ignition. The right magneto fires the lower right and upper left spark plugs, and the left magneto fires the lower left and upper right spark plugs. Normal operation is conducted with both magnetos, as more complete burning of the fuel-air mixture occurs with dual ignition. A rotary-type engine knob and push button start switch, located on the instrument panel, and keyed STARTER DISABLE switch, located on the left side of the center console, controls ignition and starter operation. The engine knob is labeled OFF - RIGHT - LEFT - BOTH. In the OFF position, the starter is electrically isolated, the magnetos are grounded and will not operate. Normally, the engine is operated on both magnetos (switch in BOTH position) except for magneto checks and emergency operations. The RIGHT and LEFT positions are used for individual magneto checks and for single magneto operation when required. When the BAT1 switch is

ON and starter disable switch is enabled, rotating the engine knob to the BOTH position and pressing the start button energizes the starter and activates both magnetos. When the BAT1 switch is OFF and the engine knob is not in the OFF position, an intermittent aural warning tone will sound to alert the pilot that the magnetos are still hot.

28 VDC for starter operation is provided through the 2-amp STARTER circuit breaker on Non-Essential Bus.

Air Induction System

Induction air enters the engine through a dry-foam induction filter mounted on the right, forward side of the engine. The air passes through the filter, through the throttle butterfly, into the six-tube engine manifold, and finally through the cylinder intake ports into the combustion chambers. Should the dry induction filter become clogged, a pilot controlled alternate induction air door can be opened, allowing engine operation to continue as described below. For additional information on the alternate air control, refer to Chapter 9: Powerplant, "Alternate Air Control".

Engine Exhaust

Engine exhaust gases are routed through an exhaust system. After leaving the cylinders, exhaust gases are routed through the exhaust manifold, through mufflers located on either side of the engine, then overboard through an exhaust pipe exiting through the lower cowling. A muff type heat exchanger, located around the right muffler, provides cabin heat.

Engine Fuel Injection

The multi-nozzle, continuous-flow fuel injection system supplies fuel for engine operation. An engine driven fuel pump draws fuel from the selected wing tank and passes it to the mixture control valve integral to the pump. The mixture control valve proportions fuel in response to the pilot operated mixture control lever position. From the mixture control, fuel is routed to the fuel-metering valve on the air-induction system throttle body. The fuel-metering valve adjusts fuel flow in response to the pilot controlled throttle position. From the metering valve, fuel is directed to the fuel manifold valve (spider) and then to the individual injector nozzles. The system meters fuel flow in proportion to engine RPM, mixture setting, and throttle angle. Manual mixture control and idle cut-off are provided. An electric fuel pump provides fuel boost for vapor suppression and for priming.

Engine Cooling

Engine cooling is accomplished by discharging heat to the oil and then to the air passing through the oil cooler, and by discharging heat directly to the air flowing past the engine. Cooling air enters the engine compartment through the two inlets in the cowling. Aluminum baffles direct the incoming air to the engine and over the engine cylinder cooling fins where the heat transfer takes place. The heated air exits the engine compartment through two vents in the aft portion of the cowling. No movable cowl flaps are used.

Controls

Engine controls are easily accessible to the pilot on the center console. They consist of a single-lever power (throttle) control and a mixture control lever.

Serials w/ Safe Return Autoland: Engine controls are automatically controlled via the avionics during an autoland event.

Serials 9750 thru 10614: A friction knob, labeled FRICTION, on the right side of the console is used to adjust control lever resistance to rotation for feel and control setting stability.

Engine Start Controls

The engine start controls are located on the pilot's side of the instrument panel to the left of the PFD. For additional information on the engine start controls, refer to Chapter 3: Instrument Panel, "Engine Start and Ignition Control Arrangement".

Power (Throttle) Lever

The single-lever throttle control, labeled MAX-POWER-IDLE, on the console adjusts the engine throttle setting in addition to automatically adjusting propeller speed. The lever is mechanically linked by cables to the air throttle body/fuel-metering valve and to the propeller governor. Moving the lever towards MAX opens the air throttle butterfly and meters more fuel to the fuel manifold. A separate cable to the propeller governor adjusts the governor oil pressure to increase propeller pitch to maintain engine RPM. The system is set to maintain approximately 2500 RPM throughout the cruise power settings and 2700 RPM at full power.

Mixture Control

The mixture control lever, labeled RICH-MIXTURE-CUTOFF, on the console adjusts the proportion of fuel to air for combustion. The Mixture Control Lever is mechanically linked to the mixture control valve in the engine-driven fuel pump. Moving the lever forward (towards RICH) repositions the valve allowing greater proportions of fuel and moving the lever aft (towards CUTOFF) reduces (leans) the proportion of fuel. The full aft position (CUTOFF) closes the control valve.

Alternate Air Control

An alternate induction air control knob, labeled ALT AIR – PULL, is installed on the left console near the pilot's right knee.To operate the control, depress the center lock button, pull the knob to the open position, and then release the lock button. Pulling the knob opens the alternate air induction door on the engine induction air manifold, bypasses the air filter, and allows warm unfiltered air to enter the engine. Alternate induction air should be used if blocking of the normal air source is suspected. Operation using alternate induction air should be minimized and the cause of filter blocking corrected as soon as practical.

Indications

Engine information is displayed using gauges and numeric display on the MFD's EIS display. Engine data is acquired by the engine airframe unit which transmits the data to the EIS for display as described in the following pages.

• NOTE •

An amber "X" through any electronic display field indicates the field is not receiving valid data and is considered inoperative.

Engine System Annunciations

Engine system health, caution, and warning messages are displayed in the Crew Alerting System (CAS) window on the PFD. In combination with a CAS alert, the affected engine parameter displayed on the EIS changes to the corresponding color of CAS alert and the annunciation system issues an audio alert.

• NOTE •

For specific pilot actions in response to System Annunciations, refer to Section 3: Emergency Procedures and Section 3A: Abnormal Procedures in the AFM.

For additional information on Engine Instrument Markings and Annunciations, refer to Section 2: Limitations in the AFM.

For additional information on the System Annunciations and Alerts, refer to the Cirrus Perspective Touch+ Avionics System Pilot's Guide.

Figure 9-1: Engine Controls and Indicating

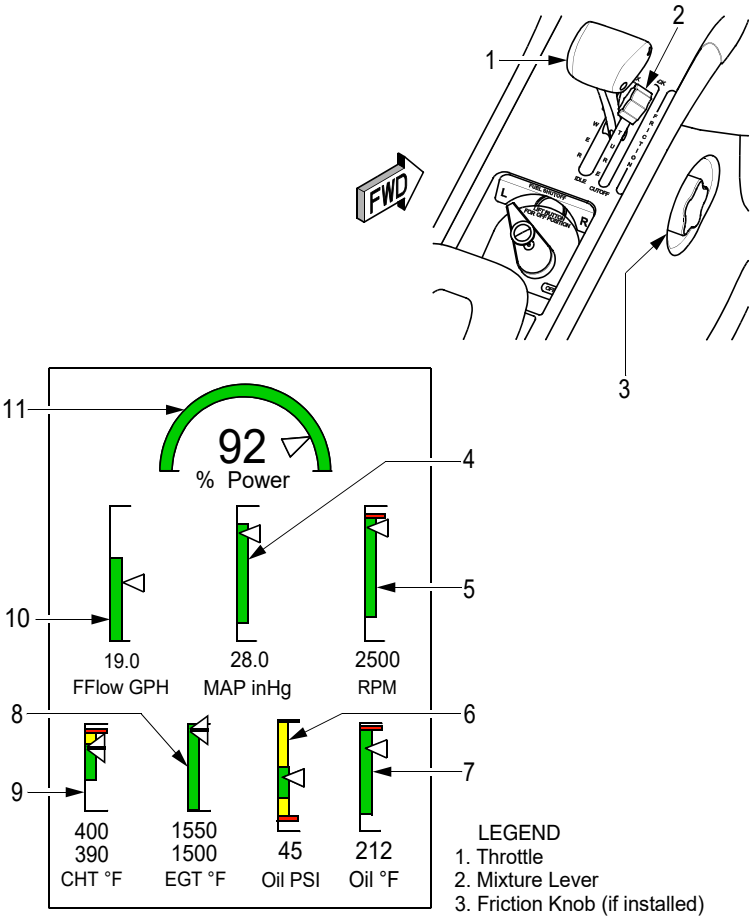

LEGEND
1. Throttle
2. Mixture Lever
3. Friction Knob (if installed)
4. Engine Manifold Pressure
5. Tachometer
6. Oil Pressure
7. Oil Temperature
8. Exhaust Gas Temperature
9. Cylinder Head Temperature
10. Fuel Flow
11. Percent Power

SR22_PM09_1050A

Tachometer

Engine speed (RPM) is displayed on the EIS as a vertical bar and numeric display. Engine speed is displayed in revolutions per minute. During normal operating conditions, gauge pointer and display text appear in white.

The tachometer receives a speed signal from a magnetic pickup sensor on the right hand magneto via the engine airframe unit.

Exhaust Gas Temperature (EGT)

Exhaust gas temperatures for all six cylinders are displayed on the Engine & Fuel Synoptic Page as vertical bar and numeric display. The numeric EGT value of the cylinder is displayed below the bar in white numerals.

A sensor in the exhaust pipe of each cylinder measures exhaust gas temperature and provides a voltage signal to the engine airframe unit which processes and transmits the data to the Engine & Fuel Synoptic Page.

Cylinder Head Temperature (CHT)

Cylinder head temperatures for all six cylinders are displayed on the Engine & Fuel Synoptic Page as vertical bar and numeric display. The digital CHT value of the cylinder is displayed below the bar in white numerals. On the EIS, only the cylinder head temperatures of the hottest and coldest cylinders are displayed. The digital CHT value of the hottest and coldest cylinders are displayed below the bar in white numerals.

A sensor in each cylinder head measures cylinder head temperature and provides a voltage signal to the engine airframe unit which processes and transmits the data to the EIS.

Oil Temperature

Oil temperature is displayed on the EIS as a vertical bar and numeric display. The oil temperature is displayed in degrees Fahrenheit. The digital temperature value is displayed in white numerals below the vertical bar.

The oil temperature sensor is mounted on the rear engine case and provides a signal to the engine airframe unit that is processed and transmitted to the EIS for display.

Oil Pressure

Oil pressure is displayed on the EIS as a vertical bar and numeric display. The oil pressure is displayed in a digital bar in psi. The digital pressure value is displayed in white numerals below the vertical bar.

The oil pressure sensor is mounted below the oil cooler and provides a signal to the engine airframe unit that is processed and transmitted to the EIS for display.

Manifold Pressure Gauge

Manifold pressure is displayed on the EIS as a vertical bar and numeric display. The pressure is displayed in inches of mercury to indicate engine power. The digital value is displayed in white numerals below the vertical bar.

The manifold pressure sensor is mounted in the induction air manifold near the throttle body and provides a signal to the engine airframe unit that is processed and transmitted to the EIS for display.

Percent Power Gauge

Percent power is displayed on the EIS as an analog gauge and numeric display. The gauge will display 0 to 100% power while the numerical display will display 0 to 140%. The digital percent power value is displayed in white numerals below the gauge. The display units calculate the percentage of maximum engine power produced by the engine based on manifold pressure, manifold air temperature, engine speed, and fuel flow.

Propeller

Overview

The airplane is equipped with a 78-inch diameter, aluminum (standard) or composite (optional), three-blade, constant speed, governor-regulated propeller.

Operation

The propeller governor automatically adjusts propeller pitch to regulate propeller and engine RPM. The propeller governor senses engine speed by means of flyweights and senses throttle setting through a cable connected to the power control lever in the cockpit. The propeller governor boosts oil pressure in order to regulate propeller pitch position. Moving the throttle forward causes the governor to meter less high-pressure oil to the propeller hub allowing centrifugal force acting on the blades to lower the propeller pitch for higher RPM operation. Reducing the throttle position causes the governor to meter more high-pressure oil to the propeller hub forcing the blades to a higher pitch, lower RPM, position. During stabilized flight, the governor automatically adjusts propeller pitch to maintain an RPM setting (based on throttle position). Any change in airspeed or load on the propeller results in a change in propeller pitch.

Intentionally Left Blank

Chapter 10: Fuel

Table of Contents

Fuel 3
Fuel Storage System 3
Overview 3
Operation 3
Controls 6
Indications 6
Alerts 8
Mixture Management 10
Overview 10
Operation 10

Intentionally Left Blank

Fuel

Fuel Storage System

Overview

A 92-gallon usable wet-wing fuel storage system provides fuel for engine operation. The system consists of a 47.25-gallon capacity (46-gallon usable) vented integral fuel tank and a fuel collector tank in each wing, an Automatic Fuel Selection System (AFSS) with manual override, an electric fuel pump, and an engine-driven fuel pump.

Operation

Fuel System

Fuel is gravity fed from each tank to the associated collector tanks where the engine-driven fuel pump draws fuel through a filter and selector valve to pressure feed the engine fuel injection system. The electric fuel pump is provided for engine priming and vapor suppression.

Each integral wing fuel tank has a filler cap in the upper surface of each wing for fuel servicing. Access panels in the lower surface of each wing allow access to the associated wet compartment (tank) for inspection and maintenance. Float-type fuel quantity sensors in each wing tank supply fuel level information to the engine airframe unit for fuel quantity display on the EIS. Fuel from each wing tank gravity feeds through strainers and a flapper valve to the associated collector tank in each wing. Each collector tank incorporates a flush mounted fuel drain and a vent to the associated fuel tank. Fuel system venting is essential to system operation. Blockage of the system will result in decreasing fuel flow and eventual engine fuel starvation and stoppage. Venting is accomplished independently from each tank by a vent line leading to a NACA-type vent mounted in an access panel underneath the wing near each wing tip.

The engine-driven fuel pump pulls filtered fuel from the two collector tanks through the fuel tank selector valve. Fuel shutoff and tank selection is positioned near the pilot for easy access. The AFSS uses a motorized mechanism to automatically move the fuel tank selector valve to the LEFT or RIGHT tank valve positions. In manual mode, the crew can select LEFT, RIGHT, or OFF valve positions. From the fuel pump, the fuel is metered to a flow divider, and delivered to the individual cylinders. Excess fuel is returned to the selected tank.

A fuel quantity gauge is located on the EIS along the left edge of the MFD and in the fuel tank quantities on the Engine & Fuel Synoptic Page.

Drain valves at the system low points allow draining the system for maintenance and for examination of fuel in the system for contamination and grade. The fuel must be sampled prior to each flight. A sampler cup is provided to drain a small amount of fuel from the wing tank drains, the collector tank drains, and the gascolator drain. If takeoff weight limitations for the next flight permit, the fuel tanks should be filled after each flight to prevent condensation from forming within the fuel tanks.

Fuel Pump

Fuel pump operation and engine prime is controlled through the fuel pump switch located on the CCSP.

The PRIME position is momentary and the BOOST position is selectable. A two-speed prime allows the fuel pressure to rapidly achieve proper starting pressure. An oil pressure based system is used to control fuel pump operation. The oil pressure/oil temperature sensor provides a signal to the starting circuit to generate a ground for the oil annunciator and the fuel system. This system allows the fuel pump to run at high speed (PRIME) when the engine oil pressure is less than 10 psi. Whenever the engine oil pressure exceeds 10 psi, the PRIME functionality of the fuel pump is disabled. This is done to prevent high speed operation while the engine is running.

Selecting BOOST energizes the fuel pump in low-speed mode regardless of oil pressure to deliver a continuous 4 to 6 psi boost to the fuel flow for vapor suppression in a hot fuel condition.

Serials w/ Safe Return Autoland: In the event of an autoland the fuel pump is automatically controlled and turned off during engine shutdown process.

The fuel pump operates on 28 VDC provided through the 5-amp FUEL PUMP circuit breaker on Main Bus 2.

Figure 10-1: Fuel System Schematic

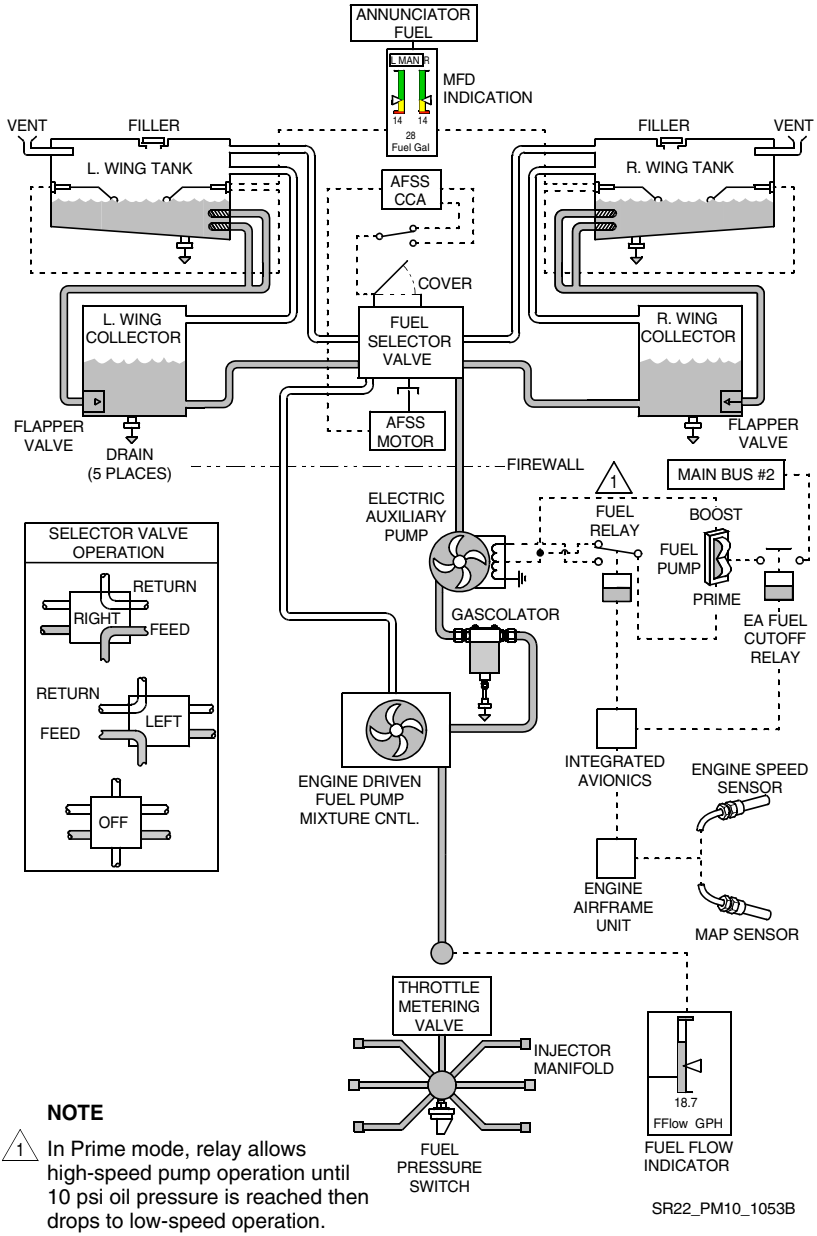

NOTE

1 In Prime mode, relay allows high-speed pump operation until 10 psi oil pressure is reached then drops to low-speed operation.

Controls

The AFSS integrates an automated fuel selector valve and handle. The automatic components include: a motor, a motor controller, logic circuit card assembly with I/O to avionics, proximity sensors, mechanical bracketry, and an intermittent motion mechanism. The selector valve is installed in the aft center console with a retractable cover over the manual selector handle. To control fuel selector manually or access the fuel shutoff, open the cover.

AUTO mode is activated when the cover is closed. When the system is in AUTO mode, the valve is switched between LEFT and RIGHT fuel tanks every 5 gallons of fuel consumed, calculated from the fuel totalizer. If the fuel totalizer signal is not valid, the system will switch between LEFT and RIGHT tank every 15 minutes. AUTO mode cannot select either OFF position on the fuel selector valve.

Manual mode is activated when the cover is open. When the system is in manual mode, the pilot can select LEFT, RIGHT, or OFF fuel selector positions.

When AUTO mode is resumed from manual mode, the system will stay in the last manually commanded position (LEFT or RIGHT) and the gallons consumed begins counting from zero when the cover is closed.

Serials w/ Safe Return Autoland: AFSS are automatically controlled via the avionics during an autoland event.

A FUEL VALVE AUTO FAIL CAS message will be displayed in case that multiple proximity sensors trigger at the same time in automatic or manual mode, or in the case that the command and physical state mismatch while the system is in automatic mode.

The AFSS operates on 28 VDC provided through the 3-amp FUEL VALVE circuit breaker on Main Bus 3.

Indications

Fuel quantity is measured by float-type quantity sensors installed in each fuel tank and displayed on the EIS and Engine & Fuel Synoptic Page.

• CAUTION •

When the fuel tanks are 1/4 full or less, prolonged uncoordinated flight such as slips or skids can uncover the fuel tank outlets. Therefore, if operating with one fuel tank dry or if operating on LEFT or RIGHT tank when 1/4 full or less, do not allow the airplane to remain in uncoordinated flight for periods in excess of 30 seconds.

• NOTE •

An amber "X" through any electronic display field indicates the field is not receiving valid data and is considered inoperative.

Fuel Quantity Gauge

Fuel quantity gauges are displayed on the Engine & Fuel Synoptic Page and the EIS section. In the case of an electronic display failure (reversionary mode), essential fuel information is displayed on the EIS on the upper right corner of the PFD or MFD.

The Engine & Fuel Synoptic Page uses a simplified diagram to display the fuel quantity for each tank (left and right) and the total fuel quantity in numerical displays.

Fuel Flow

Fuel flow is shown at the left side of the EIS on the MFD as a vertical bar gauge. Fuel flow is measured by a transducer on the right side of the engine in the fuel line between the engine driven fuel pump and distribution manifold.

The gauge displays a green normal band, which is dynamically updated to display the range of normal values appropriate to engine power settings.

The top of the green band dynamically changes based on altitude. A gap in the fuel flow band is displayed when power settings are less than or equal to 75% to aid in leaning operations.

Fuel Totalizer and Calculated Information

Fuel totalizer calculations are located at the lower left section of the Engine & Fuel Synoptic Page and are separate and independent of the fuel quantity gauge and float sensor system. The fuel totalizer monitors fuel flow and calculates fuel-to-destination, fuel used, fuel remaining, time remaining, fuel range, and nautical miles per gallon. During the avionics initialization process, the pilot must enter the total fuel on board at start. The option to enter the total gallons of fuel on board and the ability to sync the initial fuel quantity to the sensed fuel on board quantity are available.

Alerts

The fuel system annunciations are displayed in the color-coded text in the Crew Alerting System (CAS) window located to the right of the altimeter and VSI. In combination with a CAS alert, the affected fuel parameter displayed on the EIS and Engine & Fuel Synoptic Page changes to the corresponding color of CAS alert and the annunciation system issues an audio alert.

• **NOTE** •

For specific pilot actions in response to System Annunciations, refer to Section 3: Emergency Procedures and Section 3A: Abnormal Procedures in the AFM.

For additional information on Engine Instrument Markings and Annunciations, refer to Section 2: Limitations in the AFM.

For additional information on the System Annunciations and Alerts, refer to Cirrus Perspective Touch+ Avionics System Pilot's Guide.

Figure 10-2: Fuel System Controls and Indicating

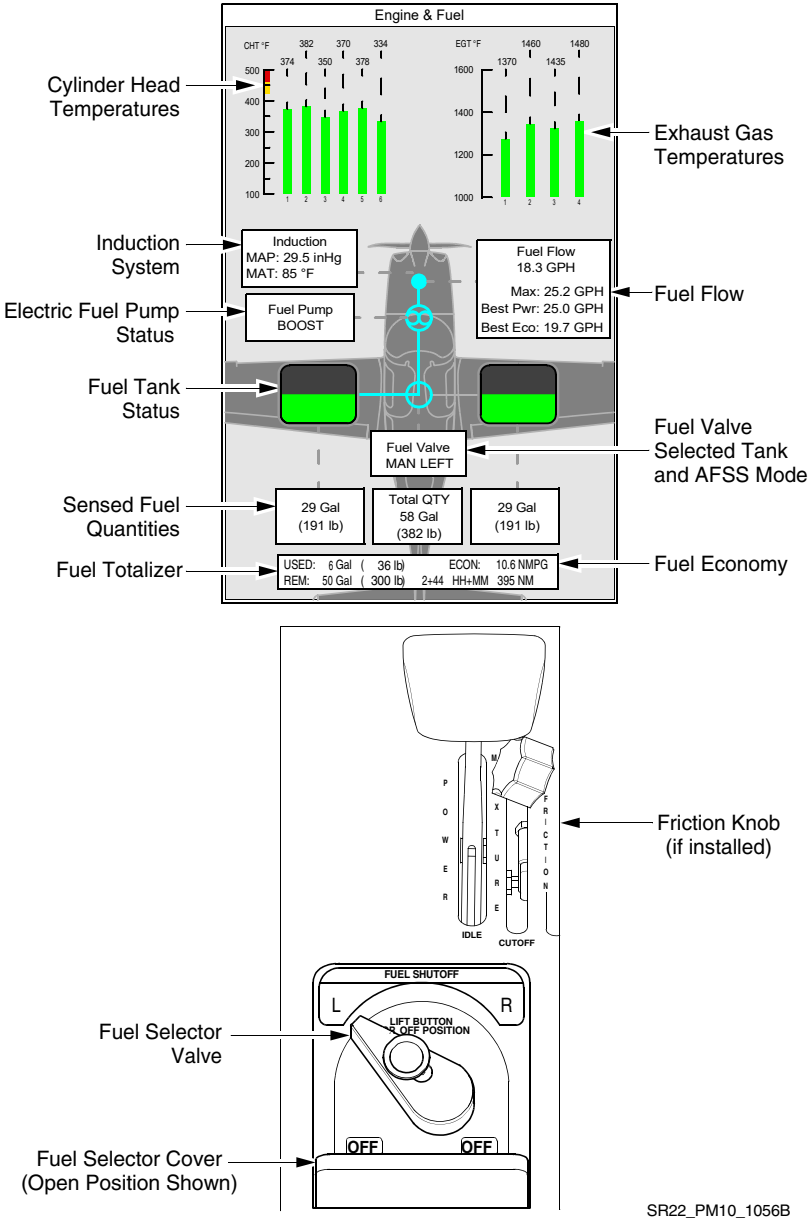

Mixture Management

Overview

The mixture control needs to be carefully monitored and managed during all phases of flight to avoid damage to the engine or a possible loss of power.

After engine start, and during taxiing operations, lean the mixture until maximum engine RPM is attained to prevent possible spark plug fouling and ensure smooth engine operation.

Operation

Takeoff and climb fuel flows need to be set appropriately. During takeoff, the mixture can be set to full rich when below 5000 feet Density Altitude (DA). For conditions where takeoff performance is critical, such as high density altitude operations (greater than 5000 feet DA), set the mixture to the fuel flow schedule that is placarded in the aircraft and published in this AFM. Refer to Section 4, Normal Procedures. Fuel flow should be set to the top of the green arc on the display. EGTs should generally be at least 1200 °F at full power.

During climb, it is necessary to lean the mixture to achieve maximum power. An excessively rich mixture and a slightly rough-running engine will occur if the mixture control is set to FULL RICH above 7500 feet pressure altitude. Follow the placarded MAX power fuel flow leaning schedule and information published in this AFM. Refer to Section 4, Normal Procedures. If CHTs or oil temps become higher than desired, using a slightly richer-than-placarded fuel flow will aid in engine cooling.

During cruise flight, the throttle should be set for 75% power or less when operating the engine at best power mixture settings, and 65% power or less when operating at best economy mixture settings. During best power operations the mixture should be set for 75 °F rich of peak EGT. During best economy operations the mixture should be set to 50 °F lean of peak EGT.

If a cruise power descent is used, it is necessary to richen the mixture to maintain EGTs at approximately 1200 to 1400 °F during descent. If a reduced power descent is used, it is still necessary to enrich the mixture to prevent an overly lean condition when power is added.

During approach and landing, the mixture should be set to the position that will result in obtaining the placarded full throttle fuel flows if the throttle were advanced to wide open.

Chapter 11: Electrical

Table of Contents

Electrical 3
Power Generation 3
Overview 3
Operation 3
Controls 9
Indications 10
Alerts 11

Intentionally Left Blank

Electrical

Power Generation

Overview

The airplane is equipped with a two-alternator, two-battery, 28 volt direct current (VDC) electrical system designed to reduce the risk of electrical system faults. The system provides uninterrupted power for avionics, flight instrumentation, lighting, and other electrically operated and controlled systems during normal operation.

Operation

Primary power for the airplane is provided by a 28 VDC, negative-ground electrical system. The electrical power generation system consists of two alternators controlled by a Master Control Unit (MCU) mounted on the left side of the firewall and two batteries for starting and electrical power storage.

Alternators (ALT 1 and ALT 2)

Alternator 1 (ALT 1) is a gear-driven, internally rectified, 100-amp alternator mounted on the right front of the engine. Alternator 2 (ALT 2) is a belt-driven, internally rectified, 70-amp alternator mounted on the front left of the engine. ALT 1 is regulated to 27.7 volts and ALT 2 is regulated to 28.7 volts. Both alternators are not self-exciting and require battery voltage for field excitation in order to start up - for this reason, the batteries should not be turned off in flight.

Batteries (BAT 1 and BAT 2)

Battery 1 (BAT 1) is rechargeable lithium-ion, 26.4-volt, 11.7 amp-hour battery mounted in the instrument panel on the right side.

If installed: Battery 1 (BAT 1) is an aviation grade 12-cell, lead-acid, 24-volt, 11 amp-hour battery mounted on the right firewall.

BAT 1 is charged from the Main Distribution Bus 1 in the MCU.

Battery 2 (BAT 2) is composed of two 12-volt, 7 amp-hour, sealed, lead-acid batteries connected in series to provide 24 volts. Both BAT 2 units are located in a vented, acid-resistant container mounted behind the aft cabin bulkhead (FS 222) below the parachute canister. BAT 2 is charged from Essential Bus 1.

Figure 11-1: Electrical System Schematic

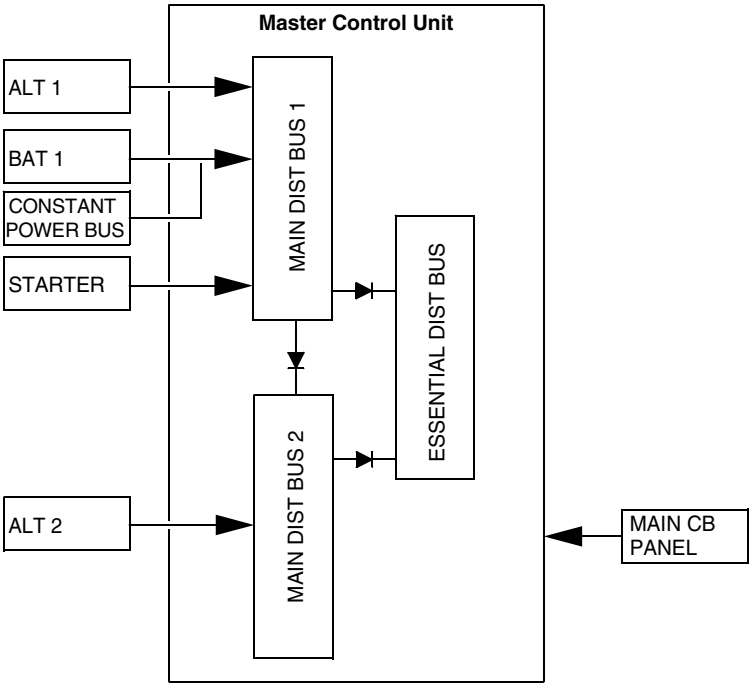

SR22_PM11_1060

External Power

A ground service receptacle is located on the left side of the airplane, forward of the firewall, with access through a door located on the lower cowl. This receptacle is installed to permit the use of an external power source for cold weather starting and maintenance procedures requiring reliable power for an extended period. The external power source must be regulated to 28 VDC. The external power control contactor is wired through the BAT 1 switch so that the BAT 1 switch must be ON to apply external power.

Master Control Unit

The MCU is located on the left firewall. The MCU controls ALT 1, ALT 2, starter, landing light, external power, and power generation functions. In addition to ALT 1 and ALT 2 voltage regulation, the MCU also provides external power reverse polarity protection, alternator overvoltage protection, as well as electrical system health annunciations to the Cirrus Perspective Touch+ Avionics System. Power is distributed to the airplane circuit breaker panel buses through the Main and Essential buses in the MCU. The Main Distribution buses are interconnected by an 80-amp fuse and a diode. The diode provides bus separation during normal operation and allows an automatic bus connection in the event of alternator failures.

Power is provided to the airplane circuits through three distribution buses contained in the MCU: Main Distribution Bus 1, Main Distribution Bus 2, and the Essential Distribution Bus. The three distribution buses power the associated buses on the circuit breaker panel.

Main Distribution Bus 1

The Main Distribution Bus 1 is powered by ALT 1 in the MCU through a 100-amp fuse. In the event of an ALT 1 failure, Main Distribution Bus 1 is powered by BAT 1 in the MCU through a 125-amp fuse. Main Distribution Bus 1 powers the nose landing light through a 7.5-amp fuse and three circuit breaker buses through 30-amp fuses located in the MCU:

1. A/C Bus 1
2. A/C Bus 2
3. Main Bus 3

Main Distribution Bus 2

The Main Distribution Bus 2 is powered by ALT 2 in the MCU through a 60-amp fuse. In the event of an ALT 2 failure, Main Distribution Bus 2 is powered by Main Distribution Bus 1 through an 80-amp fuse. Main Distribution Bus 2 powers three circuit breaker buses through 30-amp fuses located in the MCU:

1. Non-Essential Bus
2. Main Bus 1
3. Main Bus 2

Essential Distribution Bus

The Essential Distribution Bus is powered by Main Distribution Bus 1, Main Distribution Bus 2, or BAT 1 in the MCU through two 50-amp fuses. The Essential Distribution Bus is normally powered by the Main Distribution Bus 2 through a 50-amp fuse in the MCU. In the event of an ALT 2 failure, the Essential Distribution Bus will be powered by the Main Distribution Bus 1 through a 50-amp fuse in the MCU. The Essential Distribution Bus powers two circuit breaker buses through 30-amp fuses located in the MCU:

1. Essential Bus 1
2. Essential Bus 2

Constant Power Bus

The Constant Power Bus (hot bus) is powered by BAT 1 in the MCU through one 5-amp fuse located on top of the MCU.

Circuit Breakers

Individual electrical circuits connected to the Main, Essential, and Non-Essential Buses in the airplane are protected by re-settable circuit breakers mounted in the circuit breaker panel on the left side of the center console. Loads on circuit breaker panel buses are shed by pulling the individual circuit breakers.

Main Buses

The circuit breaker panel Main Bus 1 and Main Bus 2 are powered by ALT 2 from Main Distribution Bus 2 through 30-amp fuses in the MCU. In the event of ALT 2 failure, Main Distribution Bus 2 is powered through an 80-amp fuse and isolation diode by Main Distribution Bus 1, which is powered by ALT 1 and BAT 1.

The circuit breaker panel Main Bus 3 is powered by ALT 1 and BAT 1 from Main Distribution Bus 1 through a 30-amp fuse in the MCU. In the event of ALT 1 failure, BAT 1 will power Main Bus 3. ALT 2 is prevented from powering Main Bus 3 by the isolation diode interconnecting the MCU Distribution Buses 1 and 2.

Essential Buses

The circuit breaker panel Essential Bus 1 and Essential Bus 2 are powered from the Essential Distribution Bus through individual 30-amp fuses in the MCU. The Essential Bus 1 is also powered directly by BAT 2 through a 30-amp circuit breaker near the battery which then backfeeds through the Essential Distribution Bus in the MCU to the Essential Bus 2. Isolation diodes prevent BAT 2 from powering BAT 1 and the Main Distribution Bus 1 and Main Distribution Bus 2 in the MCU.

In the event of ALT 1 or ALT 2 failure, the Essential Buses in the circuit breaker panel will be powered by the remaining alternator through Main Distribution Bus 1 or Main Distribution Bus 2 in the MCU. In the case of both alternators failing, BAT 1 is connected to the Essential Distribution Bus in the MCU and will power Essential Bus 1 and Essential Bus 2. In the event of both alternators and BAT 1 failing, BAT 2 is connected to Essential Bus 1 and will back feed to Essential Bus 2.

Non-Essential Buses

The circuit breaker panel Non-Essential Bus is powered by ALT 2 from Main Distribution Bus 2 through a 30-amp fuse in the MCU. In the event of ALT 2 failure, Main Distribution Bus 2 is powered through an 80-amp fuse and isolation diode by Main Distribution Bus 1, which is powered by ALT 1 and BAT 1.

The circuit breaker panel A/C Bus 1 and A/C Bus 2 are powered by ALT 1 and BAT 1 from Main Distribution Bus 1 through 30-amp fuses in the MCU. In the event of ALT 1 failure, BAT 1 will power A/C Bus 1 and A/C Bus 2. ALT 2 is prevented from powering A/C Bus 1 and A/C Bus 2 by the isolation diode interconnecting the MCU Distribution Buses 1 and 2.

Figure 11-2: Circuit Breaker Panel

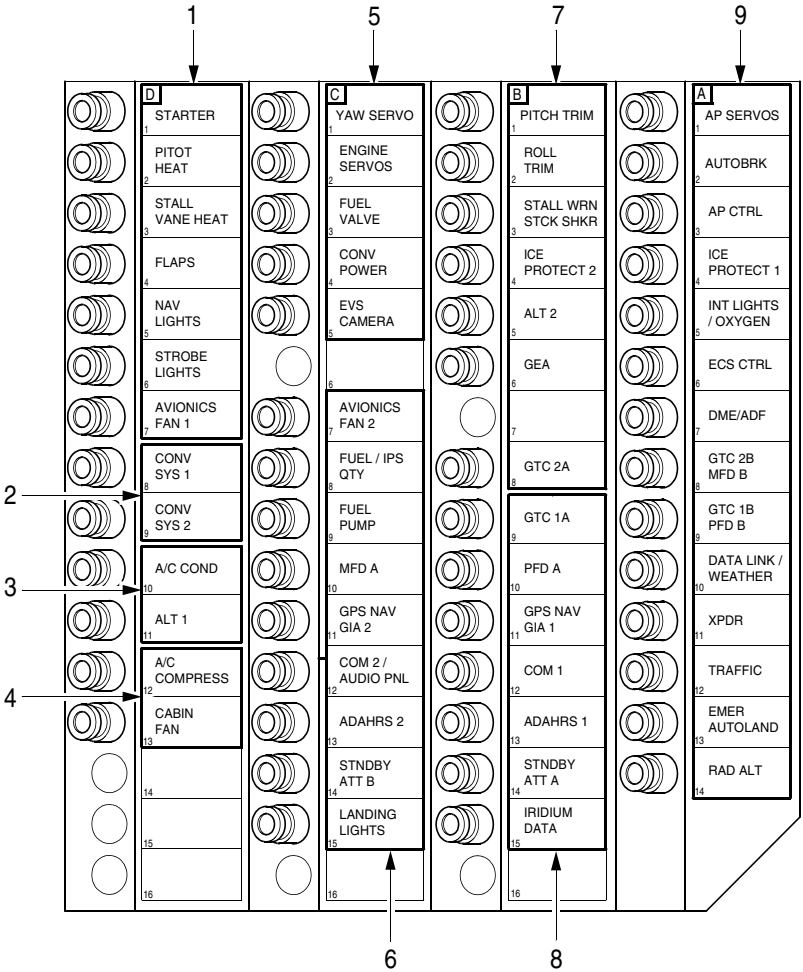

LEGEND

1. Non-Essential Bus
2. Constant Power Bus
3. A/C Bus 1
4. A/C Bus 2
5. Main Bus 3
6. Main Bus 2
7. Essential Bus 2
8. Essential Bus 1
9. Main Bus 1

ALL OPTIONAL CIRCUIT BREAKERS SHOWN

SR22_PM11_1065B

Transient Voltage Suppressors

Transient Voltage Suppressors (TVS) are installed in key areas of the electrical system to protect the system from lightning strikes. During lightning strikes, enormous energy spikes can be induced within the airplane electrical system. In the absence of any transient protection, this unwanted energy would typically be dissipated in the form of high-voltage discharge across the avionics and electrical systems of the airplane. By adding a high power TVS at key power entry points on the electrical buses, unwanted energy from electrical transients is allowed to dissipate through a semi-conducting pathway to ground.

Controls

The rocker type electrical system master switches are ON in the forward position and OFF in the aft position. The switches — labeled BAT2, BAT1, ALT1, and ALT2 — are located in the bolster switch panel immediately below the PFD. These switches control electrical power to the airplane.

Battery Switches

The BAT 1 and BAT 2 switches control the respective battery. Setting the BAT 1 switch ON energizes a relay connecting BAT 1 to the MCU Distribution Buses. Setting the BAT 2 switch ON energizes a relay connecting BAT 2 to the circuit breaker panel Essential Bus 1. Normally, for flight operations, all master switches will be ON. However, the BAT 1 and BAT 2 switches can be turned ON separately to check equipment while on the ground.

Alternator Switches

The ALT 1 and ALT 2 switches control field power to the respective alternator. For ALT 1 to generate power, the BAT 1 switch must be ON. Setting the ALT 1 switch ON allows 28 VDC from the 5-amp ALT 1 circuit breaker on A/C Bus 1 to be applied to a voltage regulator for ALT 1. For ALT 2 to generate power, either the BAT 1 switch or the BAT 2 switch must be ON. Setting the ALT 2 switch ON allows 28 VDC from the 5-amp ALT 2 circuit breaker on Essential Bus 2 to be applied to voltage regulator for ALT 2. Positioning either ALT switch to the OFF position removes the affected alternator from the electrical system.

• CAUTION •

Continued operation with the alternators switched OFF will reduce battery power enough to open the battery relay, remove power from the alternator field, and prevent alternator restart.

Indications

Electrical system information is displayed as text and a schematic representation on the MFD's Electrical Power Synoptic Page. Battery 1 ampere output and Essential Bus voltage output are also displayed as bar graphs and text along the right edge of the MFD EIS section. In the case of an electronic display failure (reversionary mode), the Battery 1 ampere output and Essential Bus voltage output is displayed on the Engine Information System on the upper right corner of the PFD or MFD. Electrical data is acquired by the engine airframe unit which transmits the data to the EIS for display as described in the following pages.

• NOTE •

An amber "X" through any electronic display field indicates the field is not receiving valid data and is considered inoperative.

Electrical System Annunciations

Electrical system health, caution, and warning messages are displayed in color-coded text in the Crew Alerting System (CAS) window located to the right of the altimeter and VSI. In combination with a CAS alert, the affected electrical parameter displayed on the EIS and Electrical Power Synoptic Page changes to the corresponding color of CAS alert and the annunciation system issues an audio alert.

• NOTE •

For specific pilot actions in response to System Annunciations, refer to Section 3: Emergency Procedures and Section 3A: Abnormal Procedures in the AFM.

For additional information on Engine Instrument Markings and Annunciations, refer to Section 2: Limitations in the AFM.

For additional information on the System Annunciations and Alerts, refer to Cirrus Perspective Touch+ Avionics System Pilot's Guide.

Figure 11-3: Electrical Indication

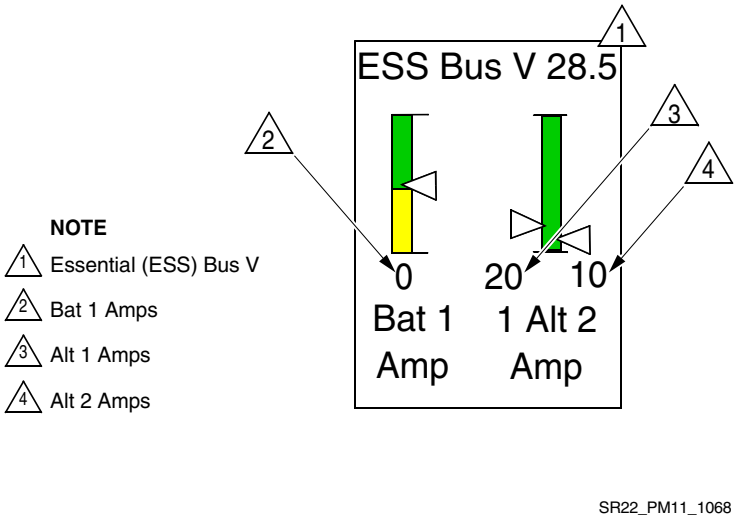

Alerts

• NOTE •

For specific pilot actions in response to System Annunciations, refer to Section 3: Emergency Procedures and Section 3A: Abnormal Procedures in the AFM.

Intentionally Left Blank

Chapter 12: Lighting

Table of Contents

Lighting 3
Instrument Lights 3
Overview 3
Operation 3
Power Source 3
Convenience Lighting 4
Overview 4
Operation 4
Power Source 5
Landing Lights 7
Overview 7
Power Source 7
Position and Anti-Collision Lights 7
Control 7
Power Source 7
Ice Inspection Lights 7
Halo Lights 8
Overview 8
Power Source 8
Operation 8
Ground Illumination and Entry Step Lights 8
Overview 8
Operation 8
Power Source 9

Intentionally Left Blank

Lighting

Interior lighting consists of overhead task lights for the pilots and passengers, select backlit overlays, and instrument/controls area lighting. The flight instrumentation and avionics equipment lights are dimmable.

The airplane wing tips have integrated exterior lighting components including integral position lights, anti-collision lights, mounted landing assist lights, and wingtip, ground illumination, and halo lights.

Serials w/ Convenience Lighting option: The entry steps have integrated ground illumination, logo, and step illumination lights.

Instrument Lights

Overview

Instrument lighting includes PFD and MFD backlighting and bezel, bolster switch panel, Garmin Touchscreen Controllers (GTCs), GMC 707 AFCS Control Unit, button backlighting and status lighting for the CCSP, backlit overlays, instrument/controls area lighting, and magnetic compass (if installed). Backlit overlays include engine ignition and start controls overlay located on the LH instrument panel, two bolster switch panel overlays located on the top and bottom strip of the bezel, center instrument panel overlay located between the PFD and MFD, four circuit breaker panel overlays located on the circuit breaker panel, an emergency overlay located overhead and forward of the CAPS handle, and the CAPS handle overlay located overhead and above the CAPS handle. Instrument/controls area lighting includes two ELT/alt air microspots located at the bottom, RH side of the pilot bolster (above pilot's right knee), a fire extinguisher microspot located inside the fire extinguisher pocket on the copilot side, and four instrument panel microspots (pilot side stick, copilot side stick, bolster switch panel, and throttle area) located in an overhead cluster on the forward task light assembly.

Operation

Associated lighting is adjustable through the INST LIGHTS control on the bolster switch panel. Rotating the knob counterclockwise dims the lights while rotating clockwise brightens the lights.

PFD, MFD, and GTCs use a photocell that allows viewing the display screens in any lighting condition.

For maximum screen illumination, rotate knob clockwise to full bright.

Power Source

The instrument light circuits operate on 28 VDC provided through the 5-amp INT LIGHTS/OXYGEN circuit breaker on Main Bus 1.

Convenience Lighting

Overview

Standard convenience lighting consists of a pilot, copilot, and two aft passenger task lights and an overhead baggage compartment light.

Serials w/ Convenience Lighting option: The convenience lighting option consists of the overhead accent lights with cabin light override function, forward and aft footwell lights, pilot and copilot storage pocket and cupholder lights, aft passenger storage pocket lights, forward cubby light, center armrest storage lights, and a key fob (if installed).

Task Lights

Individual eyeball-type task lights are installed in the headliner above pilot, copilot, and left and right rear passenger positions. Each light is aimed by positioning the lens in the socket and is controlled by a local dimmer knob located next to the light.

Overhead Baggage Compartment Light

General baggage compartment lighting is provided by a light located in the aft portion of the headliner.

Storage Pocket Lighting

The pilot and copilot storage pockets are located outboard in the footwell area and include an area spotlight and cupholder strip light. The left and right rear passenger storage pockets located outboard of the respective seat, forward center cubby located forward of the throttle area, and the forward and aft armrest storage located in the aft center console each include an area light.

Ambient Lighting

Overhead ambient strip lights are located on the left and right sides in the aft portion of the headliner. The ambient strip lights also indicate CSC activity such as flashing if a cabin door is open and the UNLOCK is pressed or when a key fob is paired to the CSC.

Footwell Lights

General floor lighting is provided by footwell lights located on the pilot and copilot kick plates and on the aft center console.

Operation

The convenience lighting is enabled by the cabin light switch.

When the cabin light switch is in the ON position:

- Task, baggage, accent, footwell, storage pockets, cubby and armrest lights turn ON. Lights will turn OFF after 5 minutes of inactivity.
- Opening the baggage door will turn the baggage light ON. Light will turn OFF after 5 minutes of inactivity.

When the cabin light switch is in the OFF position:

- Task, baggage, accent, footwell, storage pockets, cubby and armrest lights will turn OFF.

When the cabin light switch is in the AUTO position:

- Task, baggage, accent, footwell, storage pockets, cubby and armrest lights will turn ON when cabin door is open or unlocked with key fob. Lights will turn OFF after 5 minutes of inactivity.
- Task, baggage, accent, footwell, storage pockets, cubby and armrest lights will turn OFF when cabin doors are closed or locked with key fob. Lights will turn OFF after 5 minutes of inactivity.

When BAT 1 is ON, all active interior convenience lighting is dimmable through the INST LIGHTS control on the bolster switch panel. When BAT 1 is OFF, all interior convenience lighting dimming cannot be changed and will turn off after 5 minutes of inactivity.

Power Source

Task lights are powered by 28 VDC provided through the 5-amp INT LIGHTS/OXYGEN circuit breaker on Main Bus 1.

Convenience lighting is controlled by the cabin light switch located in the pilot storage pocket. 28 VDC for convenience lighting is provided through the 5-amp CONV SYS 1 circuit breaker on Constant Power Bus.

Figure 12-1: Interior Lighting Locations

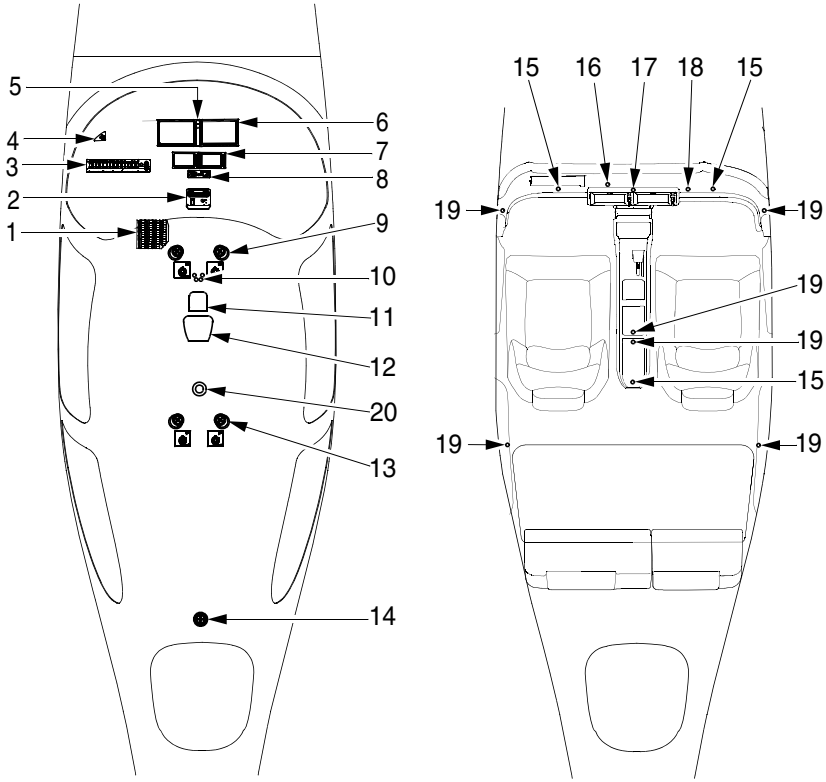

LEGEND

1. Circuit Breaker Panel Overlays
2. Center Console Switch Panel
3. Bolster Switch Panel
4. Engine Start Panel Overlay
5. Center Instrument Panel Overlay
6. PFD and MFD
7. GTC 1 and GTC 2
8. Autopilot Panel
9. Crew Task Lights
10. Headliner Microspot Lights
11. CAPS Instructions Overlay
12. CAPS Handle Overlay
13. Passenger Task Lights
14. Baggage Light
15. Footwell Lights
16. Alt Air/ELT Lights
17. Console Cubby Light
18. Fire Extinguisher Light
19. Storage Pocket Lights
20. Safe Return Autoland Light Overlay & Light Ring

SR22_PM12_1074B

Landing Lights

Overview

An LED landing light mounted in the lower engine cowl is controlled through the LAND light switch on the bolster switch panel.

The wing tip mounted landing assist/taxi lights are controlled through the LAND light switch on the bolster switch panel.

Power Source

28 VDC for the lower cowl landing light is provided through the 7.5-amp fuse on Main Distribution Bus 1 in the MCU.

28 VDC for the wing tip mounted landing assist/taxi lights is provided through the 5-amp LANDING LIGHTS circuit breaker on Main Bus 2.

Position and Anti-Collision Lights

Control

The position lights are connected directly to Non-Essential Bus and are ON whenever power is provided to Non-Essential Bus.

The anti-collision lights are controlled through the STRB switch on the LIGHTS section of the bolster switch panel.

Power Source

28 VDC for the position lights is provided through the 5-amp NAV LIGHTS circuit breaker on Non-Essential Bus.

28 VDC for the anti-collision lights is provided through the 5-amp STROBE LIGHTS circuit breaker on Non-Essential Bus.

Ice Inspection Lights

Overview

To provide visual verification of icing conditions and confirmation of fluid flow, ice inspection lights are flush mounted to the right and left fuselage skin just aft of the engine cowling. The bi-directional inspection lights illuminate the leading edge of the wing and horizontal stabilizer. Components of the system include the LED light assemblies and a two-position toggle switch labeled ICE on the LIGHTS section of the bolster switch panel.

Power Source

The ice inspection lights operate on 28 VDC provided through the 7.5-amp ICE PROTECT 1 circuit breaker on Main Bus 1.

Halo Lights

Overview

The wing tip halo lights provide additional lighting during preflight inspection.

Power Source

28 VDC for the wing tip halo lights is provided through the 5-amp CONV SYS 1 circuit breaker on Constant Power Bus.

Operation

The wing tip halo lights are enabled by the cabin light switch.

When the cabin light switch is in the AUTO or ON position and the BAT 1 switch is in the OFF position:

- Opening either cabin door will turn the wing tip halo lights on. Lights will turn off after 5 minutes of inactivity.
- Closing both cabin doors will turn the wing tip halo lights off.
- Unlocking the cabin doors using the key fob will turn the wing tip halo lights on. Lights will turn off after 1 minute of inactivity.
- Locking the cabin doors using the key fob will turn the wing tip halo lights off.

When the cabin light switch is in the AUTO or ON position and the BAT 1 switch is in the ON position:

- Wing tip halo lights will remain on if the aircraft is either on the ground or in flight below approximately 300 feet AGL.

When the cabin light switch is in the OFF position, the wing tip halo lights extinguish.

Ground Illumination and Entry Step Lights

Overview

Ground illumination and entry step lights (if installed) provide additional lighting during preflight inspection.

Operation

The ground illumination and entry step lights are enabled by the cabin light switch.

When the cabin light switch is in the AUTO or ON position and the BAT 1 switch is in the OFF position:

- Opening either cabin door will turn the ground illumination and the entry step lights ON. Lights will turn OFF after 5 minutes of inactivity.
- Closing both cabin doors will turn the ground illumination and the entry step lights OFF.

- Unlocking the cabin doors using the key fob will turn the ground illumination and the entry step lights ON. Lights will turn OFF after 1 minute of inactivity.
- Locking the cabin doors using the key fob will turn the ground illumination and the entry step lights OFF.

When the cabin light switch is in the OFF position, the ground illumination and the entry step lights will remain OFF.

Power Source

28 VDC for the ground illumination and the entry step lights are provided through the 5-amp CONV SYS 1 circuit breaker on Constant Power Bus.

Figure 12-2: Exterior Lighting Locations

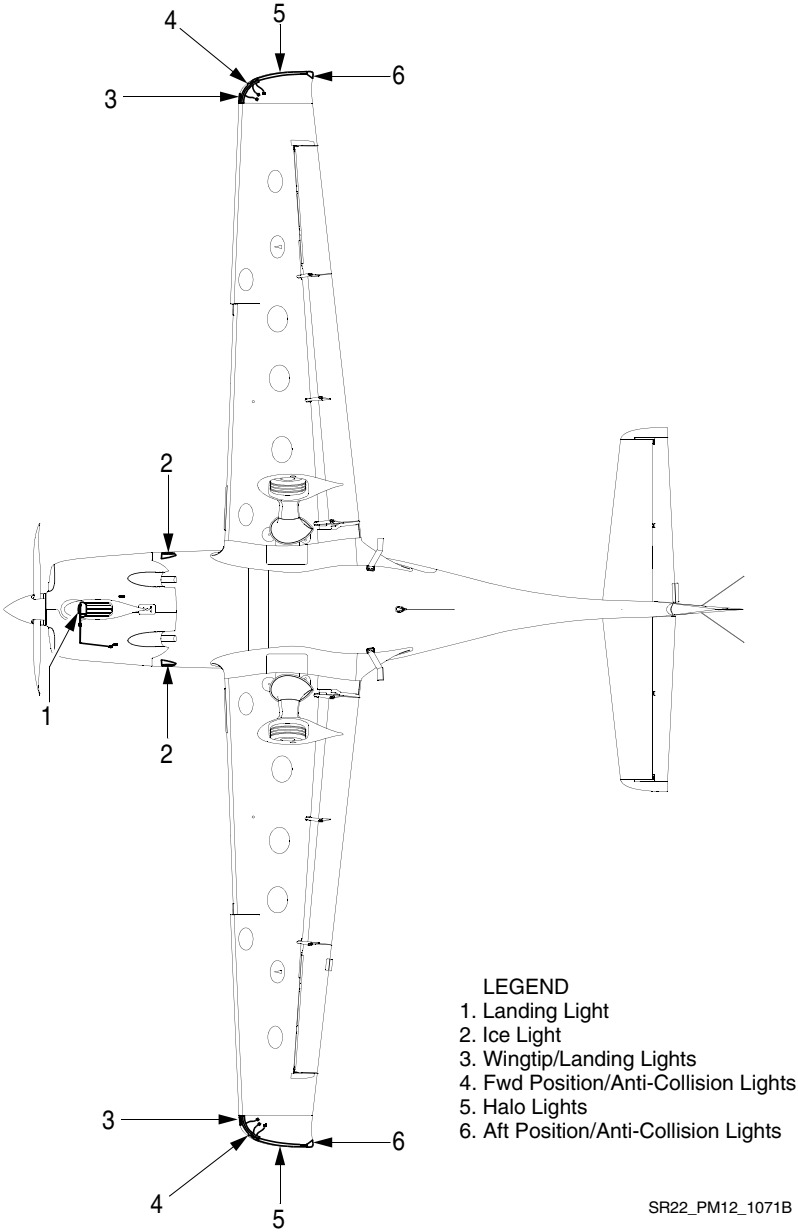

Chapter 13: Environmental Control

Table of Contents

Environmental Control 3
Heating and Cooling 3
Overview 3
Operation 6
Controls 7
Power Source 9
Alerts 9

Intentionally Left Blank

Environmental Control

The Environmental Control System (ECS) supplies conditioned air to ventilate and regulate the temperature and distribution of air in the cabin compartment.

Heating and Cooling

Overview

Cabin heating and ventilation is accomplished by supplying warmed ambient air from the exhaust heat exchanger for heating and windshield defog, and fresh outside air for ventilation. The environmental system consists of a fresh air inlet in the lower RH cowl, a heat exchanger around the RH engine exhaust muffler, an air mixing chamber, air ducting for distribution, a distribution manifold, a windshield diffuser, crew and passenger air vents and associated plumbing, controls, actuators, wiring for system flow-selection and temperature control.

An optional 3-speed blower fan is available to supplement airflow when ram air may be inadequate such as during ground operation.

The optional blower fan is powered by 28 VDC provided through a 15-amp CABIN FAN circuit breaker on A/C Bus 2.

Serials w/ Air Conditioning System:

The air conditioning system is designed to cool and dehumidify cabin. The system consists of an engine driven compressor, condenser assembly, evaporator assembly, exhaust heat exchanger, fresh air inlet, air-mixing chamber, blower fan, distribution manifold, ducting, windshield diffuser, vent outlets, associated plumbing, controls, actuators, wiring for system flow-selection and temperature control.

The engine must be running for the air conditioner to operate.

Figure 13-1: Standard Environmental System

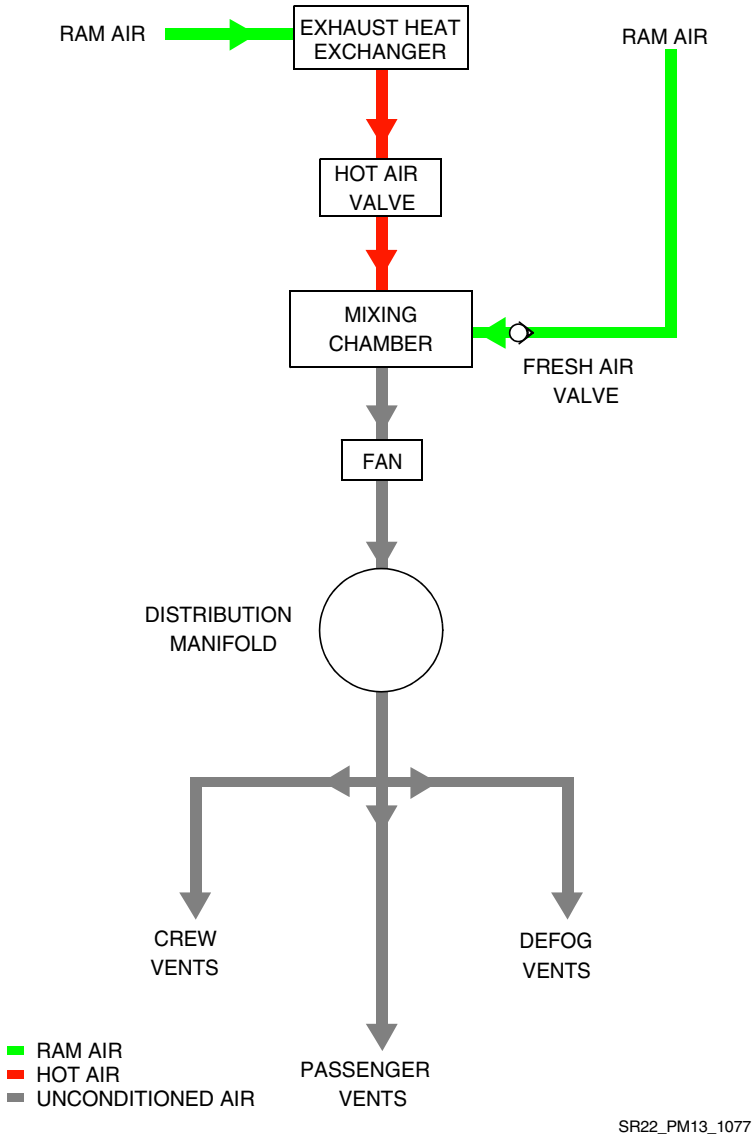

Figure 13-2: Air Conditioning System (If installed)

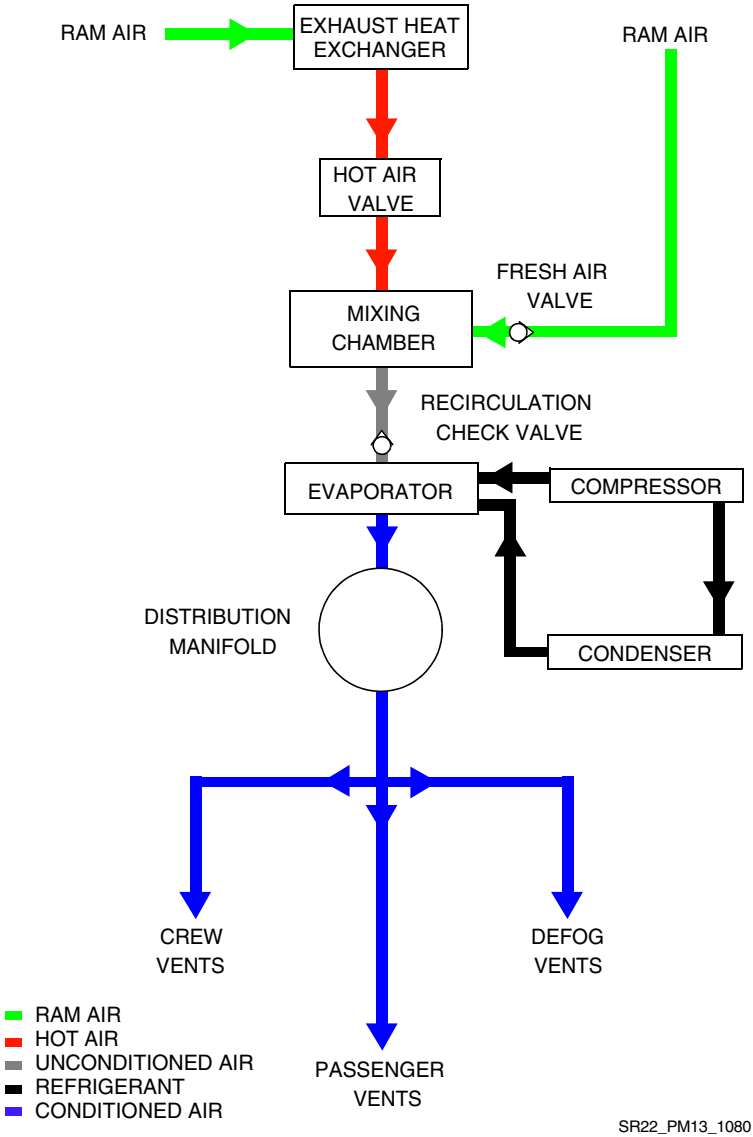

Operation

Distribution

Ventilation and cooling is provided by ducting fresh air from a NACA inlet on the RH cowl to the mixing chamber located on the lower RH portion of the firewall. Depending on operating mode and temperature selection, the air in the mixing chamber is ducted directly into the distribution system or, if in air conditioning mode (if installed), is further cooled as it passes through the evaporator assembly located under the front crew seat.

Crew fresh air vents are located on the LH and RH sides of the instrument panel. The crew floor air vents are mounted to the bottom of each kick plate. The passenger panel air vents are chest high outlets mounted in the armrests integral to the LH and RH cabin wall trim panels. The passenger floor air vents are mounted to the bottom portion of the LH and RH cabin wall trim panels. The windshield diffuser, located in the glareshield assembly, directs conditioned air to the base of the windshield.

Heating

Bleed air from the NACA inlet flows through the upper cowl and is ducted to the heat exchanger. The heated air is then routed to the hot air valve, mounted to the forward side of the firewall, which controls entry of hot air into the cabin distribution system. When the valve is open, the air flows into the cabin mixing chamber. When the valve is closed, the heated air exits into the engine compartment and is exhausted overboard with the engine cooling airflow. Cabin heat is regulated by controlling the volume of hot air admitted into the distribution system's air mixing chamber. The proportion of heated air to fresh air is accomplished using the temperature selector mounted in the center console below the cubby storage area.

Conditioned air can be directed to passengers and/or the windshield diffuser by manipulating the cabin vent selector mounted in the center console below the cubby storage area. The conditioned air enters the cabin through adjustable air vents located in each kick plate and on the outboard sides of the instrument panel, and through non-adjustable, floor level vents located in the rear cabin trim side panels. Conditioned air can also be distributed to the windshield diffuser in the glareshield.

Cooling

Standard cabin cooling is provided by ram air admitted through the NACA inlet on the RH cowl to the fresh air valve, mounted to the forward side of the firewall. When the fresh air valve is open, the air flows into the cabin mixing chamber. When the fresh air valve is closed, the cooled air exits into the engine compartment and is exhausted overboard with the engine cooling airflow.

In air conditioning mode (if installed), refrigerant enters the engine mounted compressor as a vapor and is pressurized until the heat-laden vapor reaches a point much hotter than the outside air. The compressor then pumps the vapor to the condenser where it cools, changes to a liquid, and passes to the receiver-drier. The receiver-drier's function is to filter, remove moisture, and ensure a steady flow of liquid refrigerant into the evaporator through the expansion valve - a temperature controlled metering valve which regulates the flow of liquid refrigerant to the evaporator. Inside the evaporator, the liquid refrigerant changes state to a gas and in doing so, absorbs heat. As the evaporator absorbs the heat from the air passing over the coils, the moisture from the air condenses and is drained overboard through the belly of the airplane. From the evaporator, the refrigerant vapor returns to the compressor where the cycle is repeated. During normal air conditioning operation, ram air from the fresh air intake flows into the evaporator assembly, is cooled as it passes through the evaporator coils, and is then ducted forward to the distribution manifold. During maximum air conditioning operation – or recirculation mode – the fresh air valve closes and valves in the evaporator assembly open allowing cabin air to be recirculated and further cooled as the air passes through the evaporator coils and ducted forward to the distribution manifold.

Controls

Airflow Selection

The airflow selector on the CCSP regulates the volume of airflow allowed into the cabin distribution system. When the airflow selector is turned on, an electro-mechanical linkage actuates a valve in the mixing chamber on the forward firewall to the full open position. The air is then distributed by either ram air or blower fan to the distribution manifold mounted to the center, aft side of the firewall.

Vent Selection

Air from the distribution manifold is proportioned and directed to passengers and/or the windshield by pressing the cabin vent selector buttons which electrically actuate butterfly valves at the entrances to the windshield diffuser, instrument panel, and the cabin floor ducting.

When the Temperature Selector is in the blue cool zone, there is continuous airflow to the vent outlets. Each occupant can control the flow rate from 'OFF' to maximum by rotating the nozzle.

When the Panel selector button is pushed, both butterfly valves are closed providing maximum airflow to the instrument panel and armrest eyeball outlets.

Pressing the Panel-Foot selector button opens the cabin floor butterfly valve allowing airflow to the rear seat foot warmer diffusers and the front seat outlets mounted to the underside of each kickplate.

Selecting Panel-Foot-Windshield button opens the windshield diffuser butterfly valve which permits shared airflow to the defrosting mechanism and cabin floor outlets.

When the Windshield selector button is pushed, the cabin floor butterfly valve is closed providing maximum airflow to the windshield diffuser.

Temperature Selection

The temperature selector is electrically linked to the hot and cold air valves. Rotating the selector simultaneously opens and closes the two valves, permitting hot and cold air to mix and enter the distribution system. Rotating the selector clockwise, permits warmer air to enter the system - counterclockwise, cooler air.

On airplane with the air conditioning system installed, when the air conditioning button (snowflake) is pushed, the air conditioner is activated. When recirculation button is pushed, the fresh air valve closes and cabin air is recirculated to provide for maximum air conditioning operation. When the air conditioning system is on and the temperature selector is rotated to the full cool position, recirculating mode can be activated to provide maximum cabin cooling. Air conditioning or recirculating mode is not available when the airflow fan selector is in the lowest position. Recirculating mode is not available unless the air conditioning system is operating and the temperature knob is on the coldest setting.

Figure 13-3: Environmental System Operation

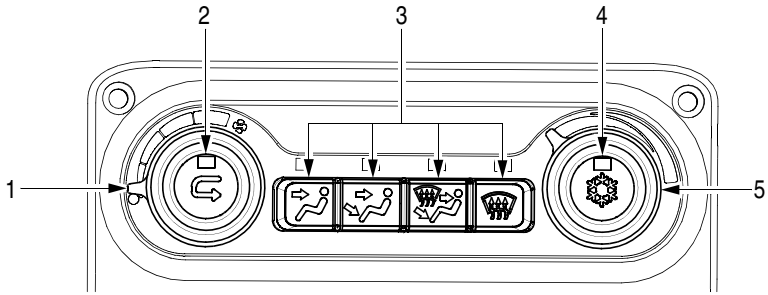

LEGEND
1. Air Flow/Fan Selector Knob
2. Recirculation Button (Serials w/ Air Conditioning)
3. Cabin Vent Selector Buttons
4. A/C Button (Serials w/ Air Conditioning)
5. Temperature Knob

SR22_PM13_1083

Power Source

28 VDC for environmental system control panel operation is provided through the 2-amp ECS CTRL circuit breaker on Main Bus 1.

The optional blower fan is powered by 28 VDC provided through a 15-amp CABIN FAN circuit breaker on A/C Bus 2.

Serials w/ Air Conditioning System:

28 VDC for air conditioner condenser operation is provided through the 15-amp A/C COND circuit breaker on A/C Bus 1.

28 VDC for air conditioner compressor operation is provided through the 5-amp A/C COMPRESS circuit breaker on A/C Bus 2.

Alerts

• **NOTE** •

For specific pilot actions in response to System Annunciations, refer to Section 3: Emergency Procedures and Section 3A: Abnormal Procedures in the AFM.

Intentionally Left Blank

Chapter 14: Air Data System

Table of Contents

Air Data System 3
Pitot-Static 3
Overview 3
Operation 3
Controls 3
Power Source 3
Alerts 3
Alternate Static Source 4
Overview 4
Operation 4
Controls 4
Stall Warning System 7
Overview 7
Operation 7
Indications 8
Power Source 8

Intentionally Left Blank

Air Data System

Pitot-Static

Overview

The pitot-static system consists of a single heated pitot tube mounted on the left wing and dual static ports mounted in the fuselage.

Serials 9750 thru 10614: The pitot heat is pilot controlled through a panel-mounted switch.

Serials 10615 and subs: The pitot heat is controlled automatically via avionics.

An internally mounted alternate static pressure source provides backup static pressure should the primary static source become blocked. Water traps with drains, under the floor in the cabin, are installed at each pitot and static line low point to collect any moisture that enters the system. The traps should be drained when water in the system is known or suspected.

The heated pitot system consists of a heating element in the pitot tube, associated wiring, and, if installed, a panel mounted switch.

Operation

Serials 9750 thru 10614: When the PROBE HEAT switch is turned on, the element in the pitot tube is heated electrically to maintain proper operation in possible icing conditions.

Serials 10615 and subs: Pitot heat is turned on by the avionics when OAT is below 5° C. The element in the pitot tube is heated electrically to maintain proper operation in possible icing conditions.

Controls

Serials 9750 thru 10614: The PROBE HEAT switch is located in the center of the bolster switch panel.

Power Source

The pitot heat system operates on 28 VDC provided through the 7.5-amp PITOT HEAT circuit breaker on Non-Essential Bus.

Alerts

• **NOTE** •

For specific pilot actions in response to System Annunciations, refer to Section 3: Emergency Procedures and Section 3A: Abnormal Procedures in the AFM.

Alternate Static Source

Overview

The alternate static pressure source valve is installed on the switch and control panel to the right of the pilot's leg.

Operation

The alternate static pressure source valve supplies static pressure from inside the cabin instead of the external static ports.

Controls

If erroneous instrument readings are suspected, the alternate static source valve should be turned on. Pressures within the cabin will vary with open heater/vents.

• **NOTE** •

Whenever the alternate static pressure source is selected, refer to Section 5: Performance Data in the AFM for airspeed calibration and altitude corrections to be applied.

Figure 14-1: *Serials w/ Triple ADAHRS:* Pitot-Static System (1 of 2)

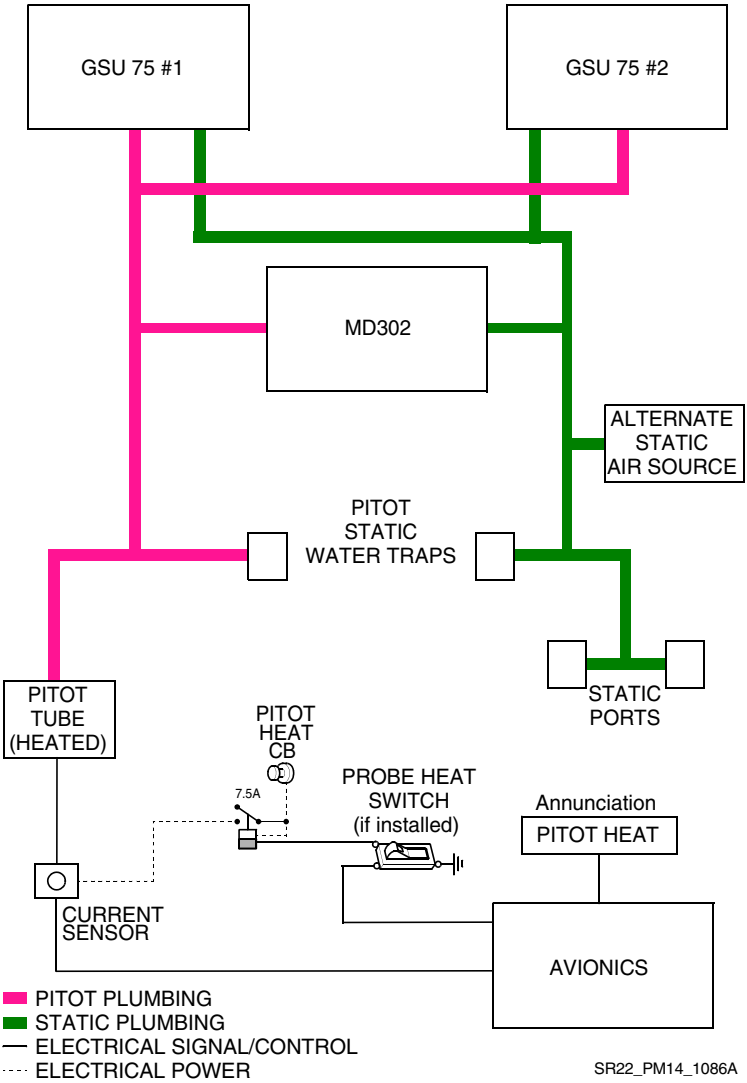

Figure 14-1: *Serials w/ Dual ADAHRS:* Pitot-Static System (2 of 2)

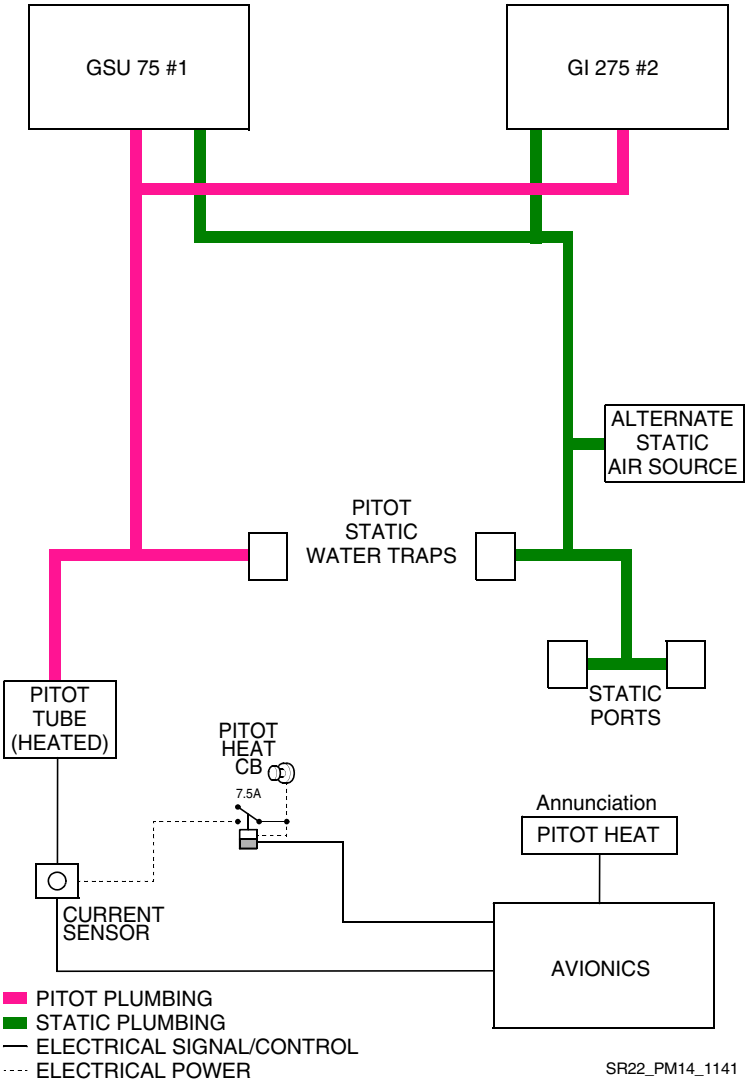

Stall Warning System

Overview

The airplane is equipped with an aural stall warning system and stick shakers which provide visual, tactile, and oral cues of an imminent stall to the crew.

The stick shaker generates a vibration into the side stick via a DC gear-motor, spinning a weight mounted to the forward side of the side stick.

Serials w/o IPS: As the airplane approaches a stall, the low pressure on the upper surface of the wings moves forward around the leading edge of the wings. As the low pressure area passes over the stall warning inlet, a slight negative pressure is sensed by the pressure switch. The pressure switch then provides a signal to cause the warning horn to sound, the red STALL warning CAS annunciation to illuminate, and the stick shaker to activate.

Serials w/ IPS installed: Stall warning is provided by the lift transducer, mounted on the leading edge of the RH wing and the stall warning computer located under the cabin floor. The lift transducer senses the force of the airstream on the vane, producing an electrical output to the stall warning computer.

Operation

The stick shaker will generate tactile feedback in the side stick while stall warning is active, except when below 50 feet in a normal landing scenario.

Serials w/o IPS: The airplane is equipped with an electro-pneumatic stall warning system to provide audible warning of an approach to aerodynamic stall. The system consists of an inlet in the leading edge of the right wing, a pressure switch and associated plumbing, and the avionics system aural warning system.

Lift Transducer (w/ IPS Installed)

When the stall warning set-point is reached, the stall warning computer provides a signal to the avionics system to activate the stall warning aural alert, CAS message, and stick shaker. The stall warning computer also provides the information used to generate the dynamic stall speed awareness indication (red band) on the airspeed tape which indicates the relative proximity to the aircraft stall speed based on the wing loading (weight, angle of bank, etc). The stall warning computer operates on 28 VDC provided through the 5-amp STALL WRN/STCK SHKR circuit breaker on the Essential Bus 2.

Ice protection for the lift transducer is provided by two faceplate heaters, one vane heater and one case heater using the PROBE HEAT switch, if installed. To prevent overheating during ground operations, a signal from the avionics is used to operate the heaters at 25% power during ground operation or 100% power while in the air.

The stall warning computer receives a signal from the avionics system to reduce nuisance stall warning while the aircraft is on the ground. The stall warning is inhibited when ground speed is less than 30 knots or airspeed is less than 50 KTAS. To allow a preflight check of the system, stall warning is enabled if RPM is less than 500 and flaps are set to 100%.

An IPS-ON discrete signal is sent to the stall warning computer when the ice protection system is set to ON. This adds additional stall warning margin to the aircraft beyond the required 5 KIAS to account for ice contamination on unprotected surfaces. Although this ensures the required margin is maintained during/after an icing encounter, it may be excessive when the aircraft is not contaminated by ice shapes.

Indications

The warning sounds at approximately 5 knots above stall; slightly greater margins are observed in turning and accelerated flight.

In the event of a stall warning system malfunction (e.g., ice accretion or other contamination at the pressure port), the STALL WARN FAIL alert will be annunciated; the aural stall warning and stick shaker are suppressed until the fault clears.

Power Source

The system operates on 28 VDC provided though the 5-amp STALL WRN/STCK SHKR circuit breaker on Essential Bus 2.

Serials w/ IPS installed: The lift transducer heat is powered by 28 VDC provided through the 10-amp STALL VANE HEAT circuit breaker on Non-Essential Bus.

Chapter 15: Automation

Table of Contents

Automation 3
Automatic Flight Control System 3
Overview 3
Operation 3
AFCS Mode Controller 6
Overview 6
Operation 6
Power Source 6
Roll, Pitch, and Yaw Servo (If Installed) 6
Overview 6
Power Source 6
Throttle and Mixture Servos (If Installed) 7
Autopilot Disconnect Switch 7
Overview 7
Takeoff / Go Around Button 7
Overview 7
Pitch Trim Adapter 7
Overview 7
Controls 7
Power Source 7
Electronic Stability and Protection 8
Overview 8
Operation 8

Intentionally Left Blank

Automation

Automatic Flight Control System

Overview

This airplane is equipped with a two-axis (three-axis optional), dual channel, fail passive Automatic Flight Control System (AFCS) which is fully integrated within the Cirrus Perspective Touch+ Avionics System architecture. Refer to Cirrus Perspective Touch+ Avionics System Pilot's Guide for additional description and operating procedures.

The system consists of an AFCS mode controller, roll servo, pitch servo, yaw servo (if installed), mixture servo (if installed), throttle servo (if installed), integrated avionics units, pitch trim adapter, autopilot disconnect switch, Takeoff/Go Around button, electric pitch-trim and roll-trim hat switch, autopilot Underspeed Protection (USP), hypoxia detection and automatic descent, Electronic Stability and Protection (ESP), and discrete-triggered low speed ESP installed (AOA based low speed ESP for IPS-equipped aircraft).

Operation

The AFCS can be divided into three primary operating functions:

Flight Director

Flight Director - The flight director provides pitch and roll commands to the AFCS system and displays them on the PFD. With the flight director activated, the pilot can hand-fly the aircraft to follow the path shown by the command bars. Flight director operation takes place within the Integrated Avionics Unit and provides:

- Mode annunciation
- Vertical reference control
- Pitch and roll command calculation
- Pitch and roll command display

Autopilot

When engaged, the autopilot uses servos to control the aircraft pitch and roll attitudes, and (if installed) provides a yaw damping function with the optional yaw damper, while following commands received from the flight director. Autopilot operation occurs within the servos and provides:

• NOTE •

Throttle and mixture servos are only active during a Safe Return Autoland Activation, not during normal autopilot use.

- Autopilot engagement and annunciation
- Autopilot command and control

- Auto-trim operation (pitch only)
- Manual electric trim
- Two axis airplane control (pitch and roll), including approaches
- Level (LVL) mode engagement command of zero roll and zero vertical speed

Yaw Damper (If Installed)

Yaw damper function is automatically engaged when the aircraft ascends above 200 feet AGL, and is disengaged when the aircraft descends below 200 feet AGL. The operation is provided by the yaw servo, and supplies yaw damper engagement and annunciation.

Temporary Interrupt of Yaw Damper Function

When the AP DISC button is pressed and held, the yaw damper function will be interrupted. Upon release of the AP DISC button, the yaw damper function will be restored.

Figure 15-1: Automatic Flight Control System Schematic

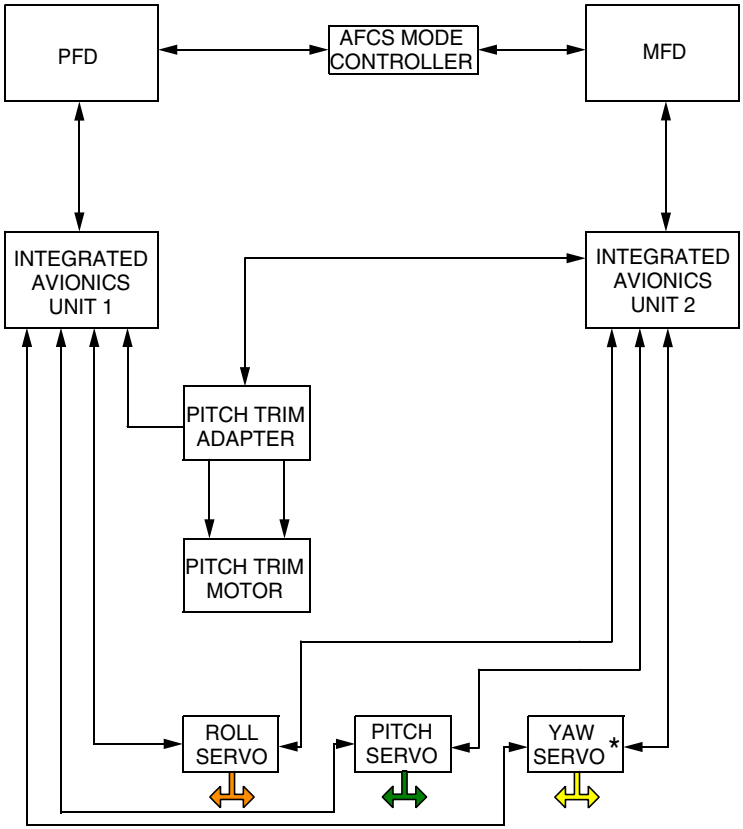

PITCH AXIS
ROLL AXIS
YAW AXIS
DATA PATH
* OPTIONAL EQUIPMENT

SR22_PM15_1089

AFCS Mode Controller

Overview

The AFCS mode controller, located in the lower section of the center console, provides primary control of autopilot modes. A pitch wheel is included for adjustment of pitch mode reference.

Operation

All autopilot mode selection is performed by using the mode select buttons and pitch wheel on the controller.

Flight Director Mode	Step Value
Default Pitch Hold (PIT)	0.50 Degree
Vertical Speed (VS)	100 Feet per Minute
Flight Level Change	1 Knot
Altitude Hold (ALT)	10 Feet

Power Source

28 VDC for AFCS mode controller operation is provided through 5-amp AP CTRL circuit breaker on Main Bus 1.

Roll, Pitch, and Yaw Servo (If Installed)

Overview

The roll servo located below the passenger seat, the pitch servo located below the baggage compartment, and the yaw servo (if installed) located in the empennage avionics bay, position the aircraft flight controls in response to flight director commands generated by the integrated avionics units.

Power Source

28 VDC for roll and pitch servo operation is provided through the 5-amp AP SERVOS circuit breaker on Main Bus 1.

28 VDC for yaw servo operation is provided through the 3-amp YAW SERVO circuit breaker on Main Bus 3.

Throttle and Mixture Servos (If Installed)

Overview

The throttle servo is located in the mid console forward of the control quadrant. The mixture servo is located in the mid console below the control quadrant. The engine power and mixture lever are automatically controlled and only engaged during a Safe Return Autoland Activation using inputs from the avionics.

Power Source

28 VDC for mixture and throttle servos operation is provided through the 5-amp ENGINE SERVOS circuit breaker on Main Bus 3.

Autopilot Disconnect Switch

Overview

The side stick mounted autopilot disconnect (AP DISC) switch disengages the autopilot and may also be used to mute the aural alert associated with an autopilot disconnect.

The AP DISC button will also temporarily suspend the servos from providing ESP correction forces, thus having an "interrupt" function.

Serials w/ Yaw Damper: When the AP DISC button is pressed and held, the yaw damper function will be interrupted.

Takeoff / Go Around Button

Overview

The TO/GA switch, located on the underside of the throttle handle, selects the Takeoff (TO) or Go Around (GA) mode on the flight director. When the aircraft is on the ground, pressing the TO/GA switch engages the flight director command bars in TO mode.

Pitch Trim Adapter

Overview

The pitch trim adapter, located below the passenger seat, takes input from the trim switches, integrated avionics units, and the pitch servo to allow the AFCS to drive the pitch trim.

Controls

The side stick mounted electric pitch trim and roll trim hat switch allows the pilot to manually adjust aircraft trim when the autopilot is not engaged.

Power Source

28 VDC for pitch trim adapter operation is provided through the 2-amp PITCH TRIM circuit breaker on Essential Bus 2.

Electronic Stability and Protection

Overview

Electronic Stability and Protection (ESP) assists the pilot in maintaining the airplane in a safe flight condition. Through the use of the AFCS sensors, processors, and servos, ESP provides control force feedback, i.e., a "soft barrier", to maintain the aircraft within the pitch, roll, and airspeed flight envelope by automatically engaging one or more servos when the aircraft is near the defined operating limit.

Operation

This feature is only active when the aircraft is above 200 ft AGL and the autopilot is not engaged. The ESP engagement envelope is the same as the autopilot engagement envelope and is not provided beyond the autopilot engagement limits.

The pilot can interrupt ESP by pressing and holding the AP DISC button. If frequent maneuvers are necessary beyond the engagement threshold, such as commercial pilot training, the system can be disabled from the Avionics Settings page on GTC 1. Disabling will cause the ESP OFF system message to annunciate on GTC 1. The system can be re-enabled from the same page, or is automatically re-enabled at the next system power-up.

Pitch and Roll Modes

When the aircraft reaches the pitch and/or roll engagement limit, the system commands the servos to apply a supplemental stick force back toward the nominal attitude range. If the aircraft continues to pitch and/or roll away from the nominal attitude range, stick forces will increase with increasing attitude deviation until the maximum autopilot engagement limits are reached - at which point ESP will disengage.

ESP attempts to return the aircraft to the nominal attitude range not to a specific attitude. As the attitude returns to the nominal range, the stick forces and attitude rate change are reduced until the aircraft reaches the disengagement threshold and ESP becomes inactive. The disengagement threshold is sized so that the transition from ESP being active to being inactive is transparent to the pilot.

Roll protection engagement limits are annunciated on the PFD as double ticks at 45° roll attitude. If the aircraft exceeds 45° roll attitude ESP becomes engaged and these indicators migrate to 30° roll attitude denoting the disengagement threshold - the point at which stick forces will be removed. No PFD annunciation is provided during pitch ESP engagement.

Figure 15-2: Roll Protection Limits

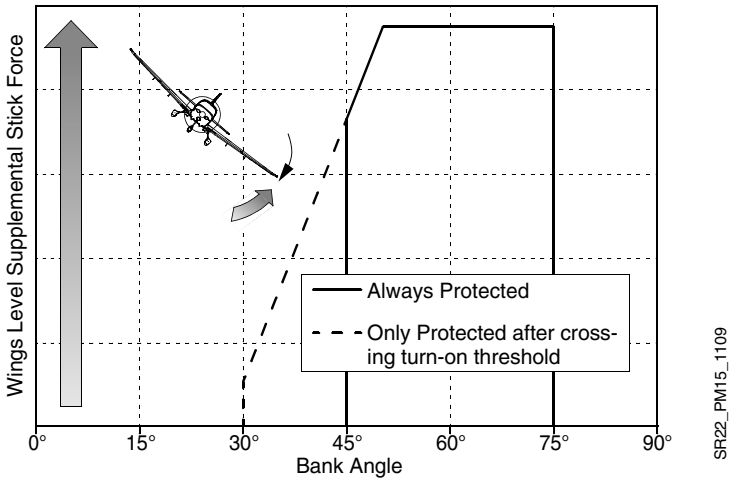

Engagement Limit: ..... 45°
Maximum Stick Force attained at ..... 50°
Disengagement Threshold (Zero Stick Force) ..... 30°

Figure 15-3: High Pitch Protection Limits

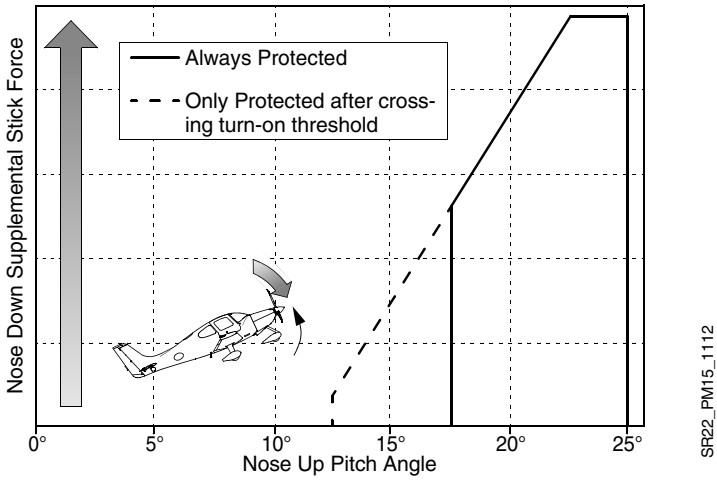

Engagement Limit: ..... +17.5°
Maximum Stick Force attained at: ..... +22.5°
Disengagement Threshold (Zero Stick Force): ..... +12.5°

Figure 15-4: Low Pitch Protection Limits

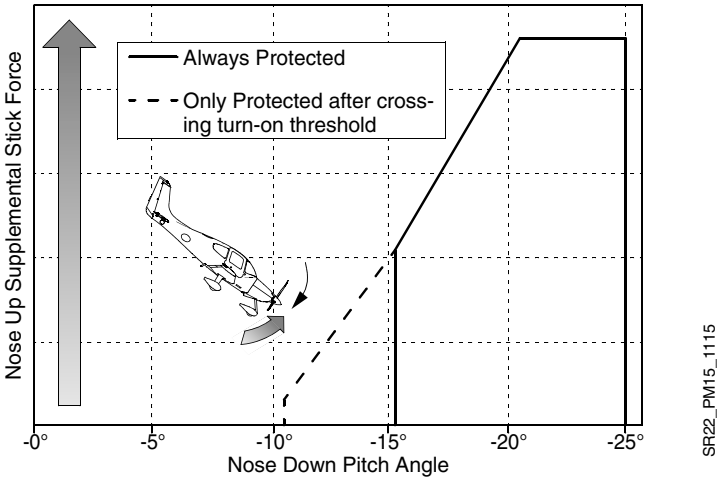

Engagement Limit:.....-15.5°

Maximum Stick Force attained at:.....-20.5°

Disengagement Threshold (Zero Stick Force):.....-10.5°

High Airspeed Mode

To protect against an overspeed condition, the high airspeed mode uses engagement limits, thresholds, and stick forces similar to those used for the pitch and roll modes, but is instead triggered by airspeed and controlled by pitch attitude. When the aircraft reaches the ESP engagement limit, the system commands the pitch servo to apply a supplemental stick force back toward the nominal airspeed range.

Figure 15-5: High Airspeed Protection Limits - Below 17,500 ft PA

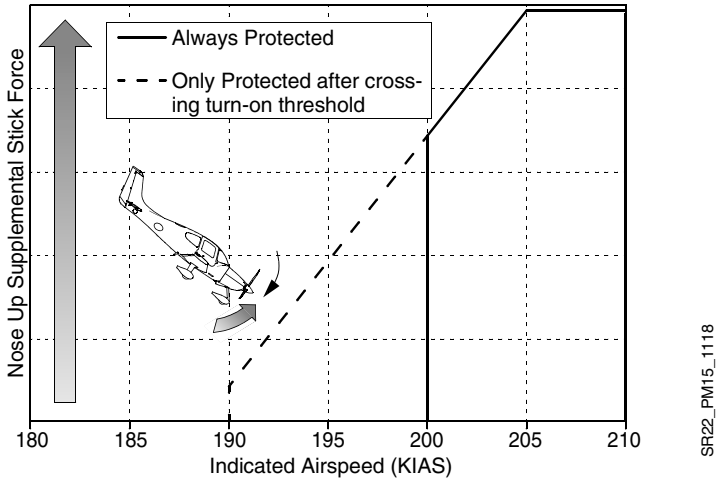

Engagement Limit: .....200 KIAS
Maximum Stick Force attained at: .....205 KIAS
Disengagement Threshold (Zero Stick Force): .....190 KIAS

Figure 15-6: High Airspeed Protection Limits - Above 17,500 ft PA

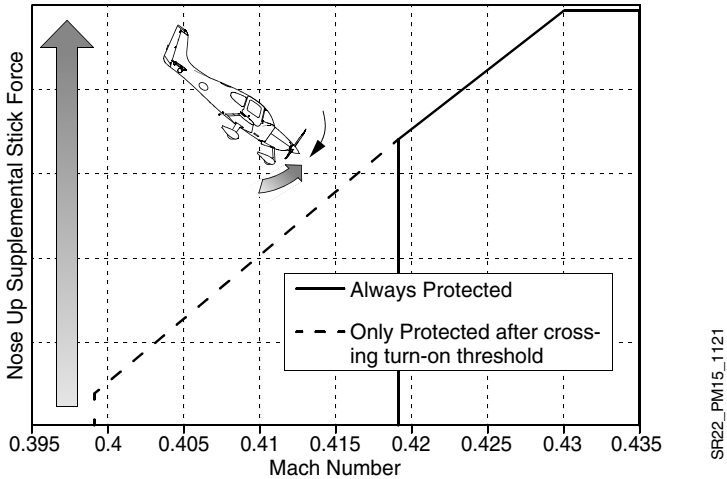

Engagement Limit: ..... Mach 0.419
Maximum Stick Force attained at: ..... Mach 0.430
Disengagement Threshold (Zero Stick Force): ..... Mach 0.399

Low Speed Mode

To protect against an impending stall, the low speed mode uses stick forces, similar to those used for the pitch and roll modes, to control the pitch attitude. These stick forces are triggered by the stall warning system. Upon stall warning system activation, the system commands the pitch servo to apply a nose-down supplemental force. The maximum stick force is attained approximately 1.5 seconds after the stall warning signal is activated, and is maintained as long as the stall warning system is active. If the stall warning system becomes inactive, the supplemental force is smoothly removed over approximately 2 seconds.

Figure 15-7: Low Airspeed Protection

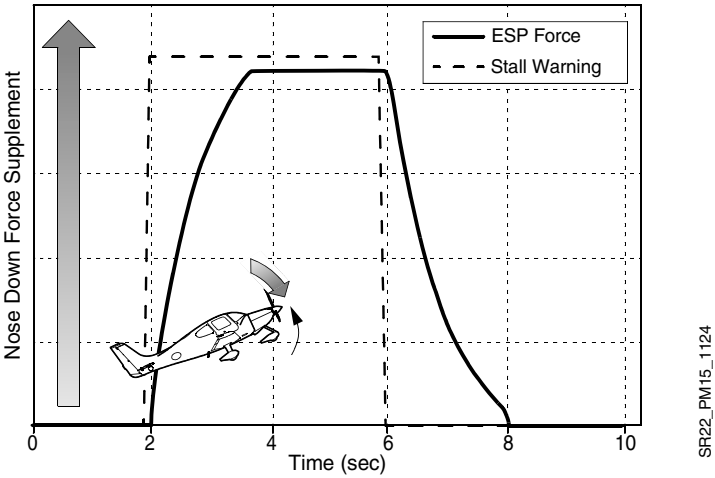

Engagement Limit:..... Stall warning

Maximum Stick Force attained at:..... 1.5 seconds after stall warning

Disengagement Threshold:..... Stall warning deactivated

Zero Stick Force: .....2 seconds after stall warning deactivated

Auto Level Mode

If ESP has been active (in any mode except low speed mode) for 20% of the last 120 seconds, the GFC 700 will automatically engage the autopilot in LVL mode. A single aural "Engaging Autopilot" will sound to alert the pilot, accompanied by the normal AFCS mode visual indicators on the PFD. This feature is only active when ESP is enabled.

Serials w/ Safe Return Autoland

Activation

Safe Return Autoland is activated after Automatic Level mode has been engaged for one minute.

Once Safe Return Autoland is activated, the system enters a 10-second waiting period, and displays an EMER AUTOLAND ACTIVATING Warning with associated 'Emergency Autoland activating' aural alert to notify crew and passengers of impending Safe Return Autoland activation. At any time, including during the waiting period or when Safe Return Autoland is fully activated, AP Disconnect or the AP button on AFCS controller can be pressed to cancel Safe Return Autoland.

• CAUTION •

If Safe Return Autoland is not canceled, the system will enter the Initial State of Safe Return Autoland mode.

Temporary Interrupt of ESP

The pilot can interrupt ESP by pressing and holding the AP DISC button. When the AP DISC button is pressed and held, the servos will provide no ESP control force feedback. Upon release of the AP DISC button, ESP will be restored.

Underspeed Protection Mode

To discourage aircraft operation below minimum established airspeeds the AFCS will automatically enter underspeed protection mode when the autopilot is engaged and airspeed falls below the minimum threshold. If aircraft stall warning system is not operational, autopilot underspeed protections that depend on that system will also not be functional (affects altitude critical modes only: ALT, GS, GP, TO, and GA).

As described in the following table, when the aircraft reaches predetermined airspeeds a yellow MINSPD annunciation will appear above the airspeed indicator and a single aural "AIRSPEED" will sound to alert the pilot to an impending underspeed condition.

The system differentiates two types of vertical modes based on which vertical flight director mode is selected; Altitude-Critical - where terrain hazards are more probable and minimized altitude loss is critical and Non-Altitude Critical - which generally correspond with activities that can afford exchange of altitude for airspeed without introducing terrain hazards.

Altitude-Critical Modes (ALT, GS, GP, GA, TO)

Upon stall warning system activation, the AFCS will disregard its flight director and autopilot reference modes and sacrifice altitude for airspeed. The system will hold wings level and airspeed will progressively increase by 1 knot per second until stall warning becomes inactive. The system will then increase airspeed an additional 2 knots above the speed at which the stall warning discontinued. Recovery may be initiated in one of three ways:

1. Add sufficient power to recover to a safe flight condition. If a small power addition is made, the AFCS will pitch the aircraft to maintain speed reference. If a large power addition is made the AFCS recognizes it via acceleration and the AP/FD will transition to a nose-up pitch to aggressively return to original altitude or glidepath/slope.
2. Disengage autopilot via the AP DISC button and manually fly.
3. Change autopilot modes to one in which the AFCS can maintain (such as VS with a negative rate).

Non-Altitude Critical Modes (VS, PIT, VNAV, LVL, FLC)

For all non-altitude critical modes, the autopilot will maintain its original reference (VS, PIT, etc.) until airspeed decays to a minimum airspeed (MINSPD). Crew alert and annunciation during a non-altitude critical underspeed event are similar to an altitude-critical event, except that:

- Stall warning may not be active. Depending on load tolerances, the AP/FD may reach the minimum airspeed reference and take underspeed corrective action before stall warning occurs. If stall warning does coincide or precede the aircraft reaching its minimum airspeed reference, it has no influence - only airspeed affects the AP/FD in non-altitude critical events.
- The originally selected lateral mode remains active.

Upon reaching minimum airspeed, the AFCS will abandon its flight director and autopilot reference modes and maintain this airspeed until recovery. As with altitude-critical modes, available options for recovery are add power, decouple/manually fly, or change autopilot modes.

When adding power, unlike the altitude-critical modes, which performs an aggressive recovery, the AP/FD will maintain MINSPD until the original reference can be maintained. Non-altitude critical modes will maintain the originally selected lateral mode (HDG, NAV, etc.).

Chapter 16: Ice Protection System

Table of Contents

Ice Protection System (If Installed) 3
Wing, Stabilizer, and Propeller Ice Protection System 3
Overview 3
Controls 6
Indications 7
Power Source 7

Intentionally Left Blank

Ice Protection System (If Installed)

Wing, Stabilizer, and Propeller Ice Protection System

Overview

The Ice Protection System (IPS) can prevent and remove ice accumulation on the flight surfaces by distributing a thin film of ice protection fluid on the wing, horizontal stabilizer, vertical stabilizer, elevator tips, and propeller. The presence of this fluid lowers the freezing temperature on the flight surface below that of the ambient precipitation preventing the formation and adhesion of ice.

The system consists of nine porous panels, propeller slinger ring, windshield spray nozzles, heated stall warning system, ice inspection lights, two proportioning units, two metering pumps, windshield/priming pump, 3-way control valve, filter assembly, in-line strainer, outlet strainers, two fluid tanks with fluid level sensors, filler caps and necks, test port assembly, electrical switching, and system plumbing.

Refer to Chapter 14: Air Data System, "Stall Warning System" for details about the heated stall warning system.

Storage and Distribution

Two separate and symmetrical 4.25 gallon (16.1 L) deicing fluid tanks are serviced through filler caps located on the upper LH and RH wings.

Upon activation, two single-speed metering pumps, mounted below the LH passenger seat, draw fluid from the tank and provide fluid pressure to the system at a constant-volume flow rate. The pumps operate both singularly and in parallel according to system mode selection.

From the metering pumps, deicing fluid is pushed through a filter assembly, mounted adjacent to the pumps, and then carried through nylon tubing to the proportioning units located in the cabin floor-forward and empennage:

- The cabin floor-forward proportioning unit distributes fluid to the LH and RH wing inboard and outboard panels and propeller slinger ring assembly.
- The empennage proportioning unit distributes fluid to the horizontal and vertical stabilizer panels and the elevator tip panels.

Porous Panels

The proportioned fluid enters the leading edge panels through the inlet fitting(s) on the inboard end of the wing and elevator tip panels, upper end of the vertical panel, and the outboard end of the horizontal panels. The outer surface of the panels is perforated with very small openings to distribute the deicing fluid along their entire length. The panels contain a porous membrane whose pores are nearly 100 times smaller than the open-

ings of the outer surface. The leading edge of the panel serves as a reservoir as fluid entering the panel fills the cavity behind the porous membrane then overcomes this resistance to be distributed by the openings in the external surface. The inlet fitting of the inboard wing porous panel also supplies fluid to the porous stall strip through an additional capillary tube which further proportions the fluid to provide a specific flow rate to the stall strip. Each panel incorporates a vent opposite the inlet which provides a relatively large opening to release air from within the panel. A check valve prevents air from entering the panel through the vent which slows the "leak-down" of the panel during periods of inactivity.

Windshield Spray Nozzles and Pump

The windshield pump, located adjacent to the main metering pumps beneath the LH passenger seat, supplies fluid to the windshield nozzles. The pump also acts as a priming pump for the main metering pumps. In the event the metering pumps cannot prime themselves, the windshield pump may be activated to purge the system of any entrapped air between the main metering pumps and the fluid tank.

Propeller Slinger Ring

Deicing fluid protects the propeller by a slinger ring mounted to the spinner backing plate where the fluid is distributed by centrifugal action onto grooved rubber boots fitted to the root end of the propeller blades.

Fluid Quantity Sensing

Fluid quantity is measured by a float type quantity sensor installed in the deicing fluid tanks.

The fluid quantity information is sent to the engine airframe unit, processed, and transmitted to the EIS and Ice Protection Synoptic Page for display.

Figure 16-1: System Schematic

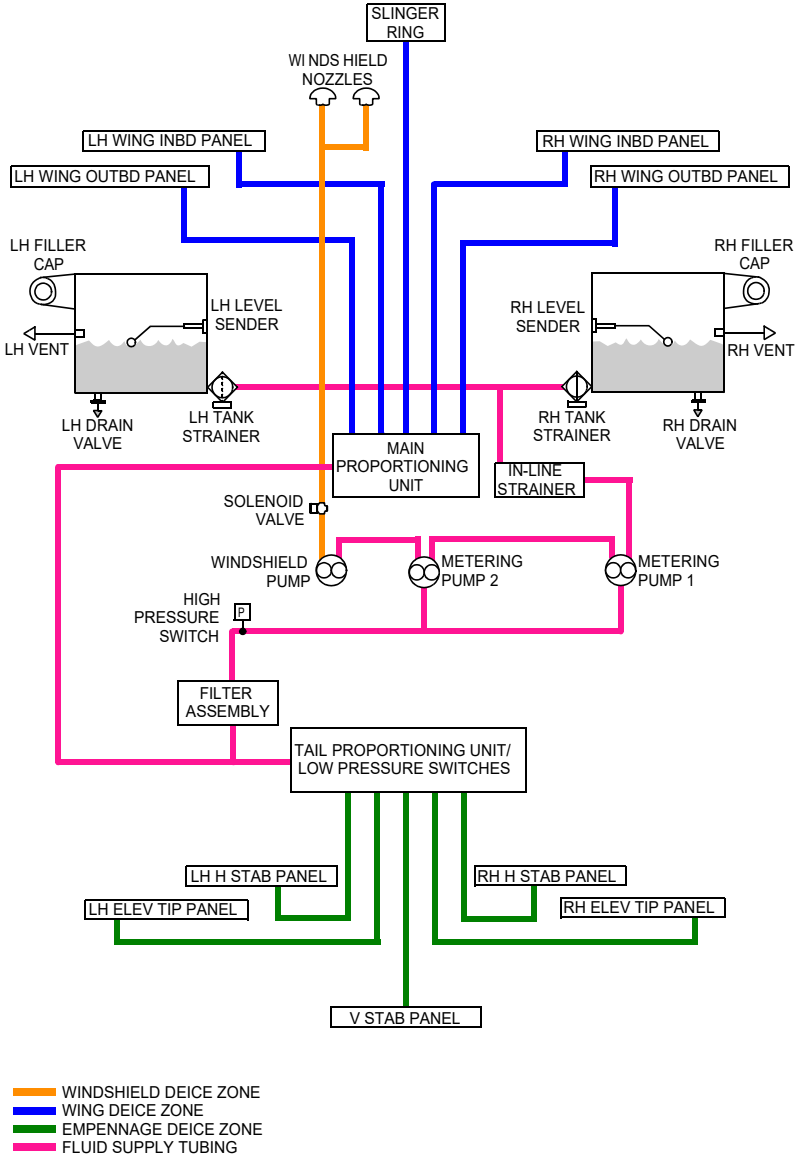

Controls

System operation is controlled by the bolster switch panel and the touch-screen controllers:

- Bolster Switch Panel: Metering pump operation and mode control (flow rate) are controlled by the ON/OFF, HIGH/NORM, and MAX switches. W/S controls the windshield pump operation. BKUP is used in the event of certain system failures.
- Avionics Touchscreen: Tank selection is provided on the Ice Protection Synoptic Page. Automatic tank selection is provided by the default, AUTO mode. While the system is operating, the fluid quantity in each tank will be passively balanced by alternating the selected tank using the 3-way control valve. Manual selection of the left or right tank can be accomplished on the GTC Aircraft Systems page when the Ice Protection Synoptic is selected.
- *Serials w/ Safe Return Autoland:* IPS is automatically controlled via avionics during an autoland activation based on OAT.

Mode Control

- NORM controls both pumps to operate quarter-time intermittently to provide 100% flow rate, i.e., 30 seconds on, 90 seconds off.
- HIGH controls #1 pump to operate continuously to provide 200% flow rate, i.e., two times the normal flow rate.
- MAX controls both pumps to operate continuously for 2 minutes to provide 400% flow rate, i.e., four times the normal flow rate. Pump operation then reverts to the system mode selected by the ICE PROTECT mode switch.
- W/S controls the windshield pump to operate continuously for approximately 3 seconds.
- BKUP controls #2 pump to operate continuously to provide 200% flow rate, i.e., two times the normal flow rate. When pump backup mode is selected, an alternate circuit by-passes the timer box and supplies power to the #2 metering pump which in turn operates continuously.

Fluid Tank Control

- AUTO: While the system is operating, the fluid quantity in each tank is passively balanced by the avionics system using the 3-way control valve and the sensed quantity of each tank.
- LEFT: Ice protection fluid is drawn from the left tank regardless of sensed quantity.
- RIGHT: Ice protection fluid is drawn from the right tank regardless of sensed quantity.

Indications

The Ice Protection Synoptic Page uses a simplified diagram to display the system status in the MFD. Numerically digital value is used to indicate LH and RH tank fluid quantity in 0.1-gallon increments.

Refer to the Cirrus Perspective Touch+ Avionics System Pilot's Guide for additional information on system annunciation and control.

Power Source

The system operates on 28 VDC provided through the 7.5-amp ICE PROTECT 1 circuit breaker on Main Bus 1 and 5-amp ICE PROTECT 2 circuit breaker on Essential Bus 2.

Intentionally Left Blank

Chapter 17: Avionics

Table of Contents

Avionics 5
Cirrus Perspective Touch+ Avionics System 5
Overview 5
Operation 6
Power Source 6
GDU 1450W/1250W Primary Flight Display 10
Overview 10
Operation 10
Power Source 10
GDU 1450W/1250W Multi Function Display 10
Overview 10
Operation 11
Power Source 11
GTC 585 Touchscreen Controllers 11
Overview 11
Operation 11
Power Source 11
GSU 75 Air Data, Attitude & Heading Reference System 14
Overview 14
Operation 14
Power Source 14
GI 275 Multifunction Instrument (If Installed) 14
Overview 14
Operation 14
Power Source 14
GIA 64W Integrated Avionics Units 15
Overview 15
Operation 15
Power Source 15
GEA 71B Engine Airframe Unit 15
Overview 15
Operation 15
Power Source 15
GTX 345 Mode S Transponder w/ UAT In 15
Overview 15
Operation 16

Power Source 16
GTX 335 Mode S Transponder (If Installed) 16
Overview 16
Operation 16
Power Source 16
GMA 36B Audio Panel 17
Overview 17
Operation 17
Power Source 17
GDL 69A XM Satellite Weather and Radio (If Installed) 17
Overview 17
Operation 17
Power Source 17
GSR 56 or GSR 56C Iridium Satellite Network Transceiver (If Installed) 17
Overview 17
Operation 18
Power Source 18
Enhanced Vision System (If Installed) 18
Overview 18
Operation 19
Power Source 19
GTS 800 Traffic Advisory System (If Installed) 19
Overview 19
Operation 19
Power Source 19
Stormscope WX-500 Weather Mapping Sensor (If Installed) 20
Overview 20
Operation 20
Power Source 20
Bendix/King KN 63 Distance Measuring Equipment (If Installed) 20
Overview 20
Operation 20
Power Source 20
Bendix/King KR 87 Automatic Direction Finder (If Installed) 21
Overview 21
Operation 21
Power Source 21
Terrain Awareness/Warning System (If Installed) 21
Overview 21
Operation 21
Synthetic Vision System 22

MD302 Standby Attitude Module (If Installed) 22
Gateway Module (If Installed) 22
Overview 22
Operation 22
Power Source 22
GRA 55 Radar Altimeter (If Installed) 23
Overview 23
Operation 23
Power Source 23
GDL 60 LTE/Wi-Fi Datalink (If Installed) 23
Overview 23
Operation 23
Power Source 23
Flight Stream 510 Wireless Avionics Interface (If Installed) 23
Overview 23
Operation 24
Power Source 24
Hour Meters 24
Overview 24
Antennas 24
Overview 24
Headset and Microphone Installation 25
Overview 25
Operation 26
Avionics Cooling Fans 26
Overview 26
Operation 26
Power Source 26
Annunciations and Alerts 27
Overview 27
Operation 27

Intentionally Left Blank

Avionics

Cirrus Perspective Touch+ Avionics System

Overview

The Cirrus Perspective Touch+ Avionics System provides advanced cockpit functionality and improved situational awareness through the use of fully integrated flight, engine, communication, navigation and monitoring equipment, and consists of the following components:

- GDU 1450W/1250W Primary Flight Display (PFD)
- GDU 1450W/1250W Multi Function Display (MFD)
- GTC 585 Touchscreen Controllers
- GSU 75 Air Data, Attitude, and Heading Reference System
- GI 275 Air Data, Attitude, and Heading Reference System (if installed)
- GIA 64W Integrated Avionics Units
- GEA 71B Engine Airframe Unit
- GTX 345/335 Transponder
- GMA 36B Audio Panel
- GFC 700 Autopilot
- GMC 707 Mode Controller
- GDL 69A XM Satellite Weather/Radio Receiver (if installed)
- GSR 56 or GSR 56C Iridium Transceiver (if installed)
- Max Viz Enhanced Vision System (if installed)
- GTS 800 Traffic Advisory System (if installed)
- Stormscope WX-500 Weather Mapping Sensor (if installed)
- Bendix/King KN 63 Distance Measuring Equipment (if installed)
- Bendix/King KR 87 Automatic Direction Finder (if installed)
- MD302 Standby Attitude Module (if installed)
- Gateway Module (if installed)
- GRA 55 Radar Altimeter (if installed)
- GDL 60 LTE/Wi-Fi Datalink (if installed)
- Flight Stream 510 Wireless Avionics Interface (if installed)

Refer to Cirrus Perspective Touch+ Avionics System Pilot's Guide (P/N 190-02955-XX) for a detailed description of the system and its operating modes.

Operation

For specific avionics component operation details, refer to the applicable system.

Power Source

For specific avionics component circuit protection details, refer to the applicable system.

Figure 17-1: Perspective Touch+ Schematic - Serials 9750 thru 10614 (1 of 3)

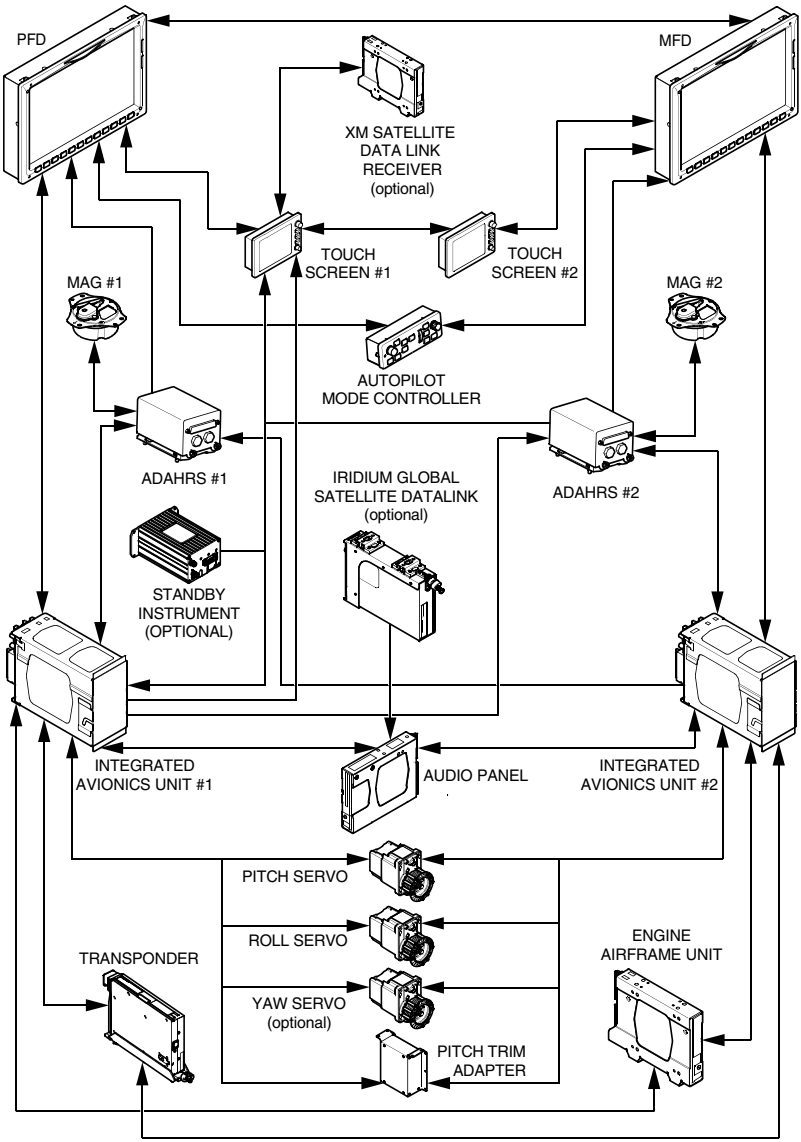

Figure 17-1: Perspective Touch+ Schematic - Serials 10615 & subs w/ Dual ADAHRS (2 of 3)

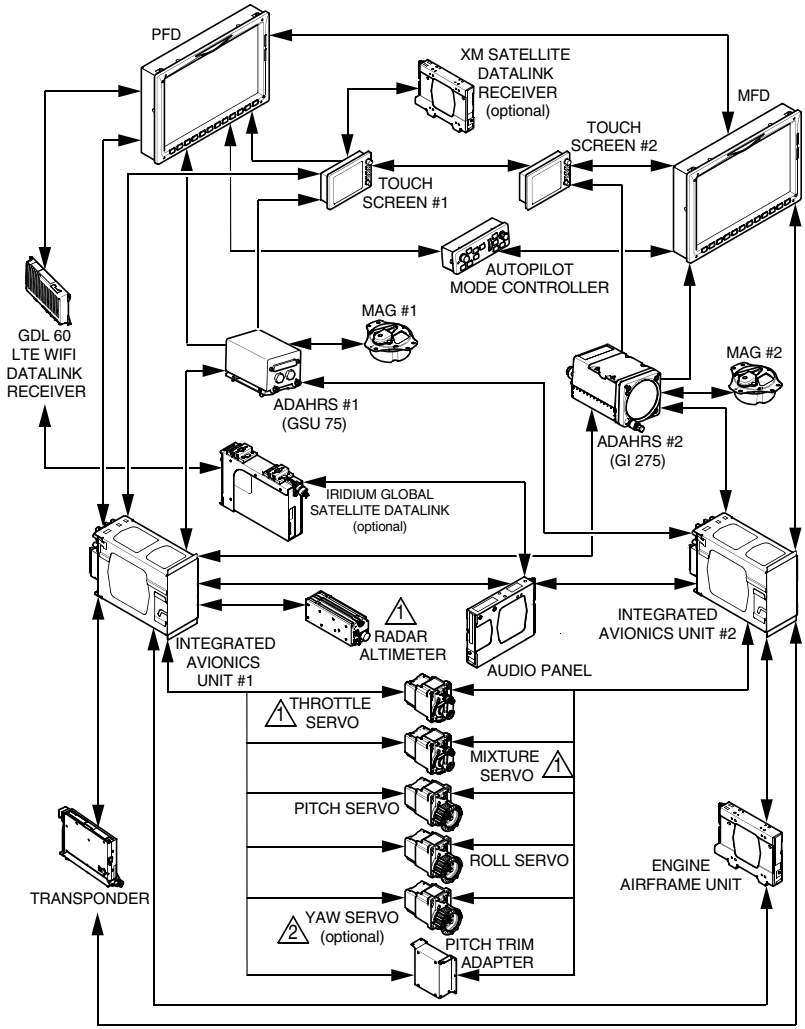

NOTE

1 Serials w/ Safe Return Autoland.

2 Optional for all aircraft, but required for serials w/ Safe Return Autoland.

SR22_PM17_1147

Figure 17-1: Perspective Touch+ Schematic - Serials 10615 & subs w/ Triple ADAHRS (3 of 3)

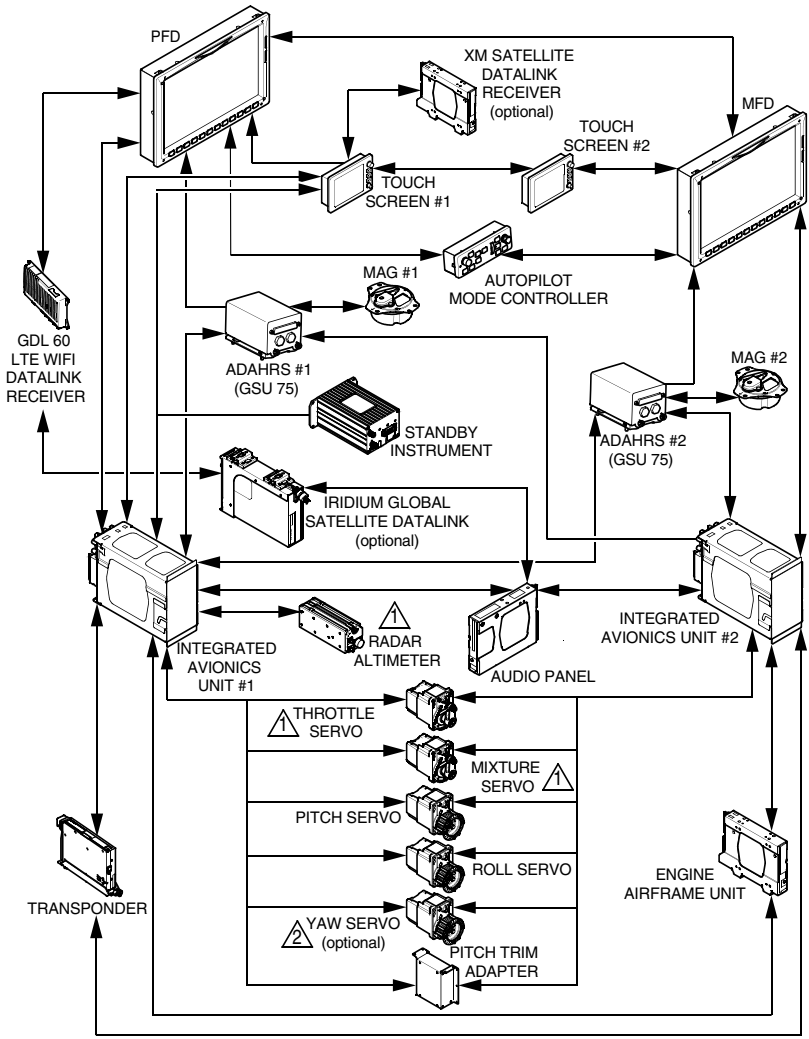

NOTE

1 Serials w/ Safe Return Autoland.

2 Optional for all aircraft, but required for serials w/ Safe Return Autoland.

SR22_PM17_1148A

GDU 1450W/1250W Primary Flight Display

Overview

The Primary Flight Display (PFD), located directly in front of the pilot, is the primary display of flight parameter information (attitude, airspeed, heading, and altitude) during normal operations. The PFD also displays communication and navigation frequencies and displays warning/status annunciations on airplane systems.

Operation

The PFD accepts data from a variety of sources through a high-speed data bus connection. During reversionary operation (MFD failure), or when the DISPLAY BACKUP push button is selected, a multi function window (MFW) is available on the PFD to display information typically available on the MFD. In the event of a detected display failure, the integrated avionics system automatically switches to display backup mode. In display backup mode, all essential flight information from PFD is presented on the remaining display in the same format as in normal operating mode with the addition of the EIS. The change to backup is automated and no pilot action is required. However, if the system fails to detect a display problem, display backup mode may be manually activated by pressing the red DISPLAY BACKUP push button. Pressing this button again deactivates display backup mode. Pressing the DISPLAY BACKUP push button also presents the standby flight display on GTC 1.

Power Source

Redundant power sources provide 28 VDC for PFD operation. Power is provided through the 5-amp PFD A circuit breaker on Essential Bus 1 and the 5-amp GTC 1B/PFD B circuit breaker on Main Bus 1. Either circuit is capable of powering the PFD. System start-up is automatic once power is applied. Power-on default brightness is determined by ambient lighting and is user adjustable.

GDU 1450W/1250W Multi Function Display

Overview

The Multi Function Display (MFD), located above the center console, depicts navigation, terrain, lightning, traffic data, NAV/COM frequencies, and annunciation information. All essential engine information is shown on the EIS on the left side of the display.

Operation

The MFD accepts data from a variety of sources through a high-speed data bus connection. During reversionary operation (PFD failure), or when the DISPLAY BACKUP push button is selected, a PFW is available on the MFD to display information typically available on the PFD. In the event of a detected display failure, the integrated avionics system automatically switches to display backup mode. In display backup mode, all essential flight information from PFD is presented on the remaining display in the same format as in normal operating mode. The change to backup is automated and no pilot action is required. However, if the system fails to detect a display problem, display backup mode may be manually activated by pressing the red DISPLAY BACKUP push button. Pressing this button again deactivates display backup mode.

Power Source

Redundant power sources provide 28 VDC for MFD operation. Power is provided through the 5-amp MFD A circuit breaker on Main Bus 2 and the 5-amp GTC 2B/MFD B circuit breaker on Main Bus 1. Either circuit is capable of powering the MFD. System start-up is automatic once power is applied. Power-on default brightness is determined by ambient lighting and is user adjustable.

GTC 585 Touchscreen Controllers

Overview

GTC 1 and GTC 2 are positioned side-by-side below the PFD and MFD. GTC 1 serves as the standby flight display.

Operation

Touchscreen controllers are the primary interface for avionics system data entry, PFW/MFW operation, and NAV/COM tuning.

Power Source

28 VDC for GTC 1 is provided through the 2-amp GTC 1A circuit breaker on Essential Bus 1 and the 5-amp GTC 1B/PFD B on Main Bus 1. 28 VDC for GTC 2 is through the 2-amp GTC 2A circuit breaker on Essential Bus 2 and the 5-amp GTC 2B/MFD B on Main Bus 1.

Figure 17-2: Cirrus Perspective Touch+ Avionics System Schematic (1 of 2)

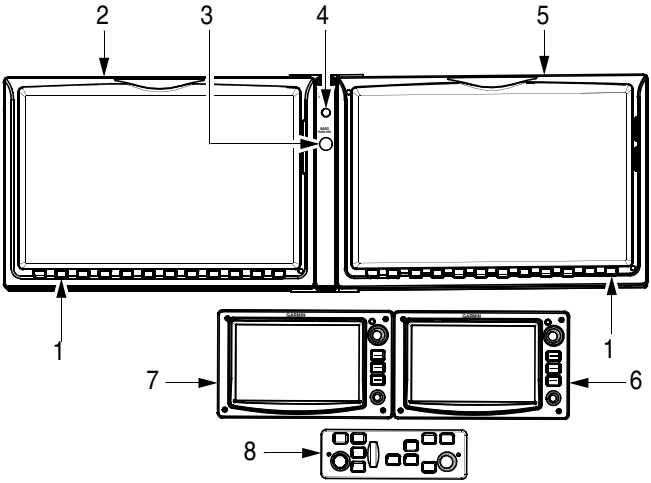

LEGEND

1. Softkeys
2. PFD
3. Baro Knob
4. Display Backup Push Button
5. MFD
6. GTC 2
7. GTC 1
8. Autopilot Controller

SR22_PM17_1098

Figure 17-2: Cirrus Perspective Touch+ Avionics System Schematic (2 of 2)

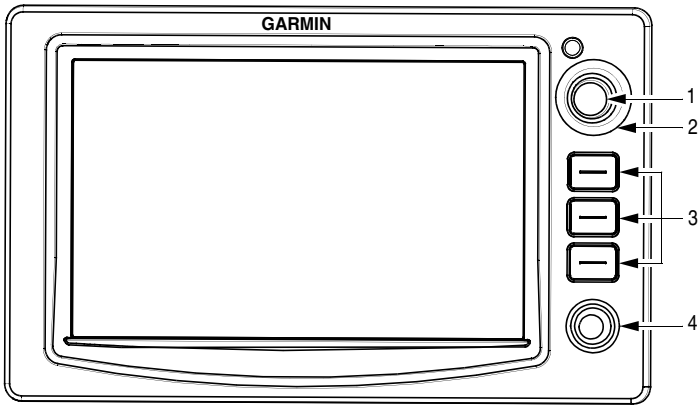

LEGEND

1. Small Upper Knob
2. Large Upper Knob
3. Softkeys
4. Lower Knob

SR22_PM17_1099

GSU 75 Air Data, Attitude & Heading Reference System

Overview

The Air Data, Attitude, and Heading Reference System (ADAHRS) unit(s), mounted behind the PFD, includes the Attitude and Heading Reference System (AHRS) and the Air Data Computer (ADC).

Serials 9750 thru 10614, and Serials 10615 and subs w/ Triple ADAHRS: There are two GSU 75 units installed.

Serials 10615 and subs w/ Dual ADAHRS: There is one GSU 75 unit installed.

Operation

The AHRS provides airplane attitude and heading information to both the PFD and the primary ADC. The ADC processes data from the pitot/static system and outside air temperature (OAT) sensor(s). The ADC also provides pressure altitude, airspeed, vertical speed and OAT information to the system.

Power Source

28 VDC for ADAHRS 1 operation is provided through the 5-amp ADAHRS 1 circuit breaker on Essential Bus 1. 28 VDC for ADAHRS 2 operation is provided through the 5-amp ADAHRS 2 circuit breaker on Main Bus 2.

GI 275 Multifunction Instrument (If Installed)

Overview

Serials 10615 and subs w/ Dual ADAHRS: The ADAHRS unit, mounted behind the PFD, includes the Attitude and Heading Reference System (AHRS) and the Air Data Computer (ADC).

Operation

The AHRS provides airplane attitude and heading information to both the PFD and the primary ADC. The ADC processes data from the pitot/static system and outside air temperature (OAT) sensor(s). The ADC also provides pressure altitude, airspeed, vertical speed and OAT information to the system.

Power Source

28 VDC for ADAHRS 1 operation is provided through the 5-amp ADAHRS 1 circuit breaker on Essential Bus 1. 28 VDC for ADAHRS 2 operation is provided through the 5-amp ADAHRS 2 circuit breaker on Main Bus 2.

GIA 64W Integrated Avionics Units

Overview

The integrated avionics units, located forward of the MFD and PFD, function as the main integration hub, linking all integrated avionics system components with the flight displays.

Operation

Each integrated avionics unit contains a GPS WAAS receiver, VHF COM/NAV/GS receivers, system integration microprocessors, and Flight Director.

Power Source

28 VDC for integrated avionics unit 1 operation is provided through the 7.5-amp COM 1 and 5-amp GPS NAV GIA 1 circuit breakers on Essential Bus 1. 28 VDC for integrated avionics unit 2 operation is provided through the 7.5-amp COM 2/AUDIO PNL and 5-amp GPS NAV GIA 2 circuit breakers on Main Bus 2.

GEA 71B Engine Airframe Unit

Overview

The engine airframe unit, mounted behind the MFD, receives and processes analog signals from the fuel gauging system, CHT, EGT, MAP, RPM and other sensors.

Operation

The engine airframe unit converts analog signals from the engine and fuel sensors to digital format, which are then transmitted to the MFD and PFD.

Power Source

28 VDC for engine airframe unit operation is provided through the 3-amp GEA circuit breaker on Essential Bus 2.

GTX 345 Mode S Transponder w/ UAT In

Overview

The GTX 345 solid state transponder communicates with the primary integrated avionics unit, provides Modes A and C interrogation 2 reply capabilities, and performs the following functions:

- UAT Reception: The GTX 345 receives ADS-B, ADS-R, and TIS-B data transmitted on the 978 MHz frequency from other aircraft, vehicles, and ground stations for traffic awareness. In addition, the GTX 345 receives FIS-B data to provide graphical and textual weather products.

- Mode S Extended Squitter (ES) Reception: The GTX 345 receives ADS-B data transmitted by aircraft on the 1090 MHz frequency for traffic awareness.
- Output of graphical traffic and weather data to the MFD and PFD (ADS-B IN).

Operation

The transponder is controlled via the PFD or Touchscreens and is located in the empennage avionics compartment.

Refer to Garmin GTX 345 Pilot's Guide Manual for a complete system description, operating modes, and additional detailed procedures.

Power Source

28 VDC for Mode S transponder operation is provided through the 2-amp XPDR circuit breaker on Main Bus 1. Refer to the Cirrus Perspective Touch+ Avionics System Guide for a complete description of the system, its operating modes, and additional detailed operating procedures.

GTX 335 Mode S Transponder (If Installed)

Overview

The GTX 335 solid-state transponder communicates with the primary integrated avionics unit and provides Modes A, C, and S with extended squitter interrogation/reply capabilities.

Operation

The transponder is controlled via GTC 585 and is located in the empennage avionics compartment.

Power Source

28 VDC for transponder operation is provided through the 2-amp XPDR circuit breaker on Main Bus 1. Refer to the Cirrus Perspective Touch+ Avionics System Pilot's Guide for a complete description of the system, its operating modes, and additional detailed operating procedures.

GMA 36B Audio Panel

Overview

The 36B audio panel, located forward of the PFD and controlled via touch-screen, integrates NAV/COM digital audio and intercom controls. Also provides a Bluetooth connection to the aircraft for audio which allows a Portable Electronic Device (PED) to make and receive telephone calls and utilize PED contacts on the touchscreen controller.

Operation

The audio panel interfaces VHF communication with both integrated avionics units.

Power Source

28 VDC for audio panel operation is provided through the 7.5-amp COM 2/AUDIO PNL circuit breaker on Main Bus 2.

GDL 69A XM Satellite Weather and Radio (If Installed)

Overview

The satellite datalink receiver, mounted in the empennage avionics compartment, receives and transmits real-time weather information to an MFW. This unit also provides digital XM audio entertainment to the cabin audio system via the audio panel.

Operation

The satellite weather system is controlled by GTC or the Flight Stream 510 Wireless Avionics Interface. Refer to the Cirrus Perspective Touch+ Avionics System Pilot's Guide for a complete description of the system, its operating modes, and additional detailed operating procedures.

Power Source

28 VDC for satellite datalink receiver operation is provided through the 5-amp DATALINK/WEATHER circuit breaker on Main Bus 1.

GSR 56 or GSR 56C Iridium Satellite Network Transceiver (If Installed)

Overview

Serials 9750 thru 11110: If installed, the aircraft is equipped with a GSR 56 Transceiver.

Serials 11111 and subs: If installed, the aircraft is equipped with a GSR 56C Transceiver.

The Iridium satellite network transceiver, mounted in the empennage avionics compartment, communicates with the primary integrated avionics unit and audio panel to provide near real-time weather, voice, and data services to the cabin audio system and integrated displays.

Operation

The GSR 56 or GSR 56C Iridium transceiver receives and transmits real-time weather information to the PFD and MFD. If the Iridium subscription-based voice and data service is active, satellite telephone/voice communications and text messaging are provided. The dialing interface is provided through the GTC and incoming call messages are prioritized with other aural messages.

The Iridium Satellite Datalink System utilizes continuous satellite broadcasts to display real time, worldwide graphical weather information on the MFD. To enhance the situational awareness to the pilot, the MFD will display NEXRAD Radar, METARs, Winds Aloft, Temps Aloft, NOTAMs, SIGMETs, AIRMETs, TFRs, PIREP, and Lighting Strikes from the National Lightning Detection Network. In addition, radar and satellite imagery are available for the United States, Southern Canada and Western Europe.

Serials 11111 and subs: In addition, the GSR 56C transceiver provides Echo Tops, Turbulence, Freezing Level, Storm Tracks, AIREPs, Icing, and Surface Visibility Forecast.

Power Source

Serials 9750 thru 11110: 28 VDC for Iridium satellite network transceiver operation is provided through the 5-amp DATALINK/WEATHER circuit breaker on Main Bus 1.

Serials 11111 and subs: 28 VDC for Iridium satellite network transceiver operation is provided through the 10-amp IRIDIUM DATA circuit breaker on Main Bus 1.

Enhanced Vision System (If Installed)

Overview

The Enhanced Vision System (EVS) is an electro-optical system that uses a Long-Wave Infrared (LWIR) camera. Infrared is particularly effective at night, smoke, haze, and smog in addition to a broad spectrum of rain, snow, and radiation-type fog. However, penetration is limited during certain environmental conditions associated with heavy rain, heavy snow, coastal fog and most cloud formations. Therefore, the EVS is not intended for all atmospheric conditions and may only be used for acquisition of objects normally viewed through the cockpit windows. EVS is an aid to visual acquisitions of:

- Ground vehicles and other ground-based equipment/obstacles,
- Aircraft on taxi-ways and runways,

- Other traffic during takeoff, approach, and landing,
- Runway and taxi lights, and
- Runway and terrain features during climb, descent, and low altitude maneuvering.

Operation

The EVS sensor, located on the underside of the LH wing, contains a long-wave infrared camera that produces an infrared image and a lowlight camera that produces a visible image. The two images are then combined to produce a single fused image and transmitted directly to the MFD. Upon power-up, the sensor requires approximately 90 seconds to produce a usable image. The image generated is a monochrome image. The hotter an object is the whiter it appears on the display.

Power Source

28 VDC EVS operation is provided through the 5-amp EVS CAMERA circuit breaker on Main Bus 3. Refer to the Max Viz Enhanced Vision System Pilot's Guide for a detailed discussion of the system. For maintenance information and special precautions to be followed, refer to Section 8: Enhanced Vision System Sensor Windows (if installed) in the AFM.

GTS 800 Traffic Advisory System (If Installed)

Overview

The GTS 800 Traffic Advisory System (TAS) advises the pilot of transponder-equipped aircraft that may pose a collision threat. The TAS consists of a transmitter receiver computer under the LH cockpit seat, and two directional antennas installed on the airplane exterior.

Operation

TAS information is displayed on the MFW and indicates the relative range, bearing, and altitude of intruder airplane. The system utilizes inputs from the secondary integrated avionics units via the primary ADC and is controlled via GTC 1. Refer to the Cirrus Perspective Touch+ Avionics System Pilot's Guide for a general description of the system and its operating modes.

Power Source

28 VDC for TAS operation is provided through the 5-amp TRAFFIC circuit breaker on Main Bus 1. Refer to the Cirrus Perspective Touch+ Avionics System Pilot's Guide for a general description of the system and its operating modes.

Stormscope WX-500 Weather Mapping Sensor (If Installed)

Overview

The Stormscope WX-500 system detects electrical discharges associated with thunderstorms and displays the activity on the MFW. The system consists of an antenna located on top of the fuselage and a processor unit mounted under the aft baggage floor.

Operation

The antenna detects the electrical and magnetic fields generated by intra-cloud, inter-cloud, or cloud to ground electrical discharges occurring within 200 nm of the airplane and sends the discharge data to the processor. The processor digitizes, analyzes, and converts the discharge signals into range and bearing data and communicates the data to the MFW every two seconds via the secondary integrated avionics unit.

Refer to the Cirrus Perspective Touch+ Avionics System Pilot's Guide for a general description of the system and its operating modes.

Power Source

28 VDC for weather system operation is provided through the 5-amp DATALINK/WEATHER circuit breaker on Main Bus 1. If applicable, refer to the L-3 Stormscope WX-500 Weather Mapping Sensor Pilot's Guide for a detailed discussion of the system.

Bendix/King KN 63 Distance Measuring Equipment (If Installed)

Overview

The Bendix/King KN 63 Distance Measuring Equipment (DME) determines airplane distance to a land-based transponder by sending and receiving pulse pairs - two pulses of fixed duration and separation. The ground stations are typically collocated with VORs. The system consists of an antenna installed on the airplane exterior and the KN 63 receiver which communicates with the integrated avionics system via the secondary integrated avionics unit.

Operation

Refer to the Cirrus Perspective Touch+ Avionics System Pilot's Guide for a general description of the system and its operating modes.

Power Source

28 VDC for DME operation is provided through the 3-amp DME/ADF circuit breaker on Main Bus 1. Refer to the Bendix/King DME System Pilot's Guide for a detailed discussion of the system.

Bendix/King KR 87 Automatic Direction Finder (If Installed)

Overview

The Bendix/King KR 87 Automatic Direction Finder (ADF), located in the pilot side bolster panel, is a digitally tuned solid state receiver which provides bearing information to stations in the 200 KHz to 1799 KHz frequency band. The ADF also provides audio reception to enable the pilot to identify stations and listen to transcribed weather broadcasts or commercial radio stations in the AM broadcast band. The ADF antenna is located on the fuselage belly.

Operation

Refer to the Cirrus Perspective Touch+ Avionics System Pilot's Guide for a general description of the system and its operating modes.

Power Source

28 VDC for ADF operation is provided through the 3-amp DME/ADF circuit breaker on Main Bus 1. Refer to the Bendix/King ADF System Pilot's Guide for a detailed discussion of the system.

Terrain Awareness/Warning System (If Installed)

Overview

The airplane is equipped with the Garmin Terrain Awareness/Warning System (TAWS) that performs the functions of a Class B TAWS in accordance with TSO C151b.

Operation

The TAWS receives data from the GPS receiver to determine horizontal position and altitude and compares this information to the onboard terrain and obstacle databases to calculate and "predict" the aircraft's flight path in relation to the surrounding terrain and obstacles. In this manner, TAWS provides advanced alerts of predicted dangerous terrain conditions via aural alerts communicated through the pilot's headset and color-coded terrain annunciations displayed on the PFD.

Refer to the Cirrus Perspective Touch+ Avionics System Integrated Flight Deck Pilot's Guide for additional information on the system and its operating modes.

Synthetic Vision System

The Synthetic Vision System (SVS) is intended to provide the pilot with enhance situational awareness by placing a three dimensional depiction of terrain, obstacles, traffic, and the desired flight path on the PFD so that proximity and location is more easily understood during instrument scanning. The SVS database is created from a digital elevation model with a 9 arc-sec (approx. 885 ft (270m)) horizontal resolution.

The Synthetic Vision System is not intended to be used independently of traditional attitude instrumentation. Consequently, SVS is disabled when traditional attitude instrumentation is not available. Otherwise, the traditional attitude instrumentation will always be visible in the foreground with SVS features in the background. The PFD with SVS installed includes:

- Perspective depiction of surrounding terrain,
- Zero pitch line,
- Perspective depiction of runways,
- Perspective depiction of large bodies of water,
- Perspective depiction of obstacles,
- Flight path marker,
- Terrain warning system,
- Field of view depiction on the MFD Navigation Page.

MD302 Standby Attitude Module (If Installed)

Refer to Chapter 4: Flight Instruments, "Standby Flight Display" for more details.

Gateway Module (If Installed)

Overview

The gateway module collects aircraft data from the aircraft avionics.

Operation

The gateway module provides a cellular connection while on the ground for automatic transmission of aircraft data. This data can then be accessed by the pilot via a mobile application provided by Cirrus. The gateway module also provides access to the current status of aircraft consumables when the aircraft is unattended by remotely powering select systems on the aircraft when requested via the mobile application Cirrus IQ.

Power Source

28 VDC for the gateway module operation is provided through the 5-amp CONV SYS 2 circuit breaker on Constant Power Bus.

GRA 55 Radar Altimeter (If Installed)

Overview

The GRA 55 Radar Altimeter is composed of a transceiver that is mounted under the RH passenger seat and two radar altimeter antennas.

Operation

The GRA 55 Radar Altimeter measures AGL altitudes from 0 to 2,500 feet. Availability of radar altitude provides an additional source of altitude for enhanced AGL awareness.

Power Source

28 VDC for the radar altimeter operation is provided through the 5-amp RAD ALT circuit breaker on Main Bus 1.

GDL 60 LTE/Wi-Fi Datalink (If Installed)

Overview

The LTE / WiFi Datalink system consists of the Garmin Data Logger (GDL 60) transceiver located in the RH empennage avionics compartment, the LTE / WiFi antennas mounted internally adjacent to access panel RE3, and system wire harness.

Operation

The GDL 60 is a flight parameter recorder with a high-speed LTE / WiFi transceiver for transmitting data collected from the integrated avionics system for trend monitoring and maintenance planning. The GDL 60 provides communication between mobile devices and the XM receiver.

Power Source

28 VDC for the GDL 60 is provided through the 5-amp CONV SYS 2 circuit breaker on Constant Power Bus.

Flight Stream 510 Wireless Avionics Interface (If Installed)

Overview

The Flight Stream 510 wireless avionics interface allows the connection of a compatible mobile electronic device to the avionics. The Flight Stream 510 utilizes a Bluetooth™ connection for pairing up to four devices as well as a WiFi connection for wireless database transfer. The Flight Stream 510 is installed in the bottom MFD card slot.

• CAUTION •

AHRS information transmitted by Flight Stream 510 is not to be used as a primary source of aircraft attitude information.

Operation

Data output from the Flight Stream 510 can be used to provide additional situational awareness for the pilot and passengers. Flight plans can be transferred between compatible mobile devices and the Cirrus Perspective Touch+ Avionics System using supported mobile applications. The Flight Stream 510 also serves as a wireless GDL 69 controller through which the aircraft crew or passengers can select Sirius/XM audio channels and control volume.

Power Source

Power for Flight Stream 510 operation is provided through the MFD which is powered by the 5-amp MFD A circuit breaker on Main Bus 2 and the 5-amp GTC 1B/MFD B circuit breaker on Main Bus 1.

For a complete description of the Flight Stream 510 system, its operating modes, and additional detailed operating procedures, refer to the Cirrus Perspective Touch+ Avionics System Pilot's Guide.

Hour Meters

Overview

Total and flight hours are calculated by the avionics. Times are displayed on the Aircraft Status page and the Cirrus IQ mobile application.

Antennas

Overview

Standard Installations

Two rod-type COM antennas are mounted to the airplane's exterior: COM 1 is mounted directly above the passenger compartment and COM 2 is mounted directly below the baggage compartment. These antennas are connected to the two VHF communication transceivers contained in the integrated avionics units.

A sled-type marker beacon antenna is mounted below the baggage compartment floor and provides a signal to the marker beacon receiver located in the audio panel. If the air conditioning system is installed, this antenna is located below the baggage floor inside of the airplane.

The transponder antenna is located on the bottom side of the airplane, just aft of the baggage compartment bulkhead to the right of the centerline of the airplane.

GPS 1 antenna is mounted directly above the passenger compartment. If the optional XM system is installed, a combination GPS 1/XM antenna is installed in this location.

Serials 9750 thru 11110: A combination GPS 2/Iridium antenna is mounted just forward of the baggage compartment window. These antennas are connected to the two GPS receivers contained in the integrated avionics units.

Serials 11111 and subs: A GPS 2 antenna is mounted just forward of the baggage compartment window. The antenna is connected to the two GPS receivers contained in the integrated avionics units.

The navigation antenna is mounted to the top of the vertical fin. This antenna provides VOR and glidescope signals to the VHF navigation receivers contained in the integrated avionics units.

Optional Installations

The optional blade-type DME antenna is mounted on the airplane underside just aft, right of the firewall.

If GTS 800 TAS is installed, an antenna is mounted above the pilot/copilot compartment, and a second blade-type antenna is located on the bottom RH side of the airplane just forward of the baggage compartment.

The optional lightning detection antenna is mounted directly above the passenger compartment.

If the gateway module is installed, two internal antennas are located on the RH side of airplane just aft of empennage access panel.

If the GDL 60 is installed, four internal antennas are located on the RH side of airplane just aft of empennage access panel.

If the radar altimeter is installed two external antennas are located on the underbelly of the forward fuselage.

Serials 11111 and subs: If the Iridium Satellite Datalink System is installed, an Iridium antenna is mounted just aft of the baggage compartment window.

Headset and Microphone Installation

Overview

The center console has three Active Noise Reduction (ANR) jacks, two for the front crew seats, and one for the rear center passenger seat, and two microphone jacks for use with oxygen masks.

The rear outboard passenger seats each have an ANR jack in the storage pocket beneath the armrest.

Operation

The forward headset mics use the remote Push-To-Talk (PTT) switches located on the top of the associated side stick grip. The rear headsets do not have COM transmit capabilities and do not require PTT switches. Audio to headsets is controlled by the individual audio selector switches on the audio control panel. 28 VDC for headset power is provided through the 1-amp headset power fuse located behind the circuit breaker panel.

Avionics Cooling Fans

Overview

Three electric fans provide forced ambient-air cooling for the Cirrus Perspective Touch+ Avionics System.

Operation

A fan located forward of the instrument panel provides ambient air cooling directly to the integrated avionics units. Two additional fans blow air directly onto the heat sinks located on the forward sides of the PFD and MFD.

Power Source

28 VDC for MFD fan operation is provided through the 3-amp AVIONICS FAN 1 circuit breaker on Non-Essential Bus. 28 VDC for PFD and integrated avionics unit fan operation is provided through the 5-amp AVIONICS FAN 2 circuit breaker on Main Bus 2.

Annunciations and Alerts

Overview

In combination with the CAS window, the system issues an audio alert when specific system conditions are met. An expanded description of the condition is available for display in the Alerts window on the GTC touch-screen by pressing MSG icon.

• **NOTE** •

For specific pilot actions in response to System Annunciations, refer to Section 3: Emergency Procedures, and Section 3A: Abnormal Procedures in the AFM.

For additional information on Engine Instrument Markings and Annunciations, refer to Section 2: Limitations in the AFM.

Operation

Aircraft annunciations and alerts are displayed in the Crew Alerting System (CAS) window located to the right of the altimeter and VSI. Aircraft annunciations are grouped by criticality and sorted by order of appearance with the most recent message on top. The color of the message text is based on its urgency and required action:

- Warning (red) – Immediate crew awareness and action required.
- Caution (yellow) – Immediate crew awareness and future corrective action required.
- Advisory (white) – Crew awareness required and subsequent action may be required.

Intentionally Left Blank

Chapter 18: Cabin Features

Table of Contents

Cabin Features 3
Emergency Locator Transmitter (ELT) 3
Overview 3
Operation 3
Fire Extinguisher 6
Overview 6
Operation 6
USB Ports 7
Overview 7
Power Source 7

Intentionally Left Blank

Cabin Features

Emergency Locator Transmitter (ELT)

Overview

The airplane is equipped with a self-contained Artex ELT 1000 406 MHz emergency locator transmitter that generates a signal to assist in search and rescue for missing aircraft. The ELT transmitter is installed immediately behind the aft cabin bulkhead, slightly to the right of the airplane centerline. The transmitter and antenna are accessible through the avionics bay access panel along the aft portion of the RH fuselage or the lower aft center access panel of baggage compartment.

Operation

The transmitter is automatically activated upon sensing a change of velocity along its longitudinal axis exceeding 4 to 5 feet per second, or upon sensing deployment of the Cirrus Airframe Parachute System (CAPS). Once activated, the ELT transmits VHF band audio sweeps at 121.5 MHz until battery power is gone.

In addition, for the first 24 hours of operation, a 406 MHz signal is transmitted at 50-second intervals. This transmission lasts 440 milliseconds and contains aircraft-specific information and GPS position data provided by the Garmin avionics. The transmitted data is referenced in a database maintained by the national authority responsible for ELT registration to identify the beacon and owner.

The ELT panel is located immediately forward of the circuit breaker panel near the pilot's right knee. The Remote Switch and Control Panel Indicator (RCPI) provides test and monitoring functions for the transmitter. The panel contains a switch labeled ON - ARM/OFF - TEST, and a red LED annunciator. The LED annunciator flashes when the ELT is transmitting.

A battery pack consisting of two D cell lithium batteries mounts to a cover assembly within the transmitter to provide power to the transmitter. The expiration date of the batteries is indicated on the outside of the ELT battery case and recorded in the aircraft logs.

A warning buzzer is mounted to the ELT shelf. When the ELT is activated, the buzzer beeps periodically. This buzzer operates in tandem with the ELT panel indicator and serves as a redundant annunciation. Power to the buzzer is provided by the ELT batteries.

To Use ELT Portably

The ELT transmitter can be removed from the airplane and used as a personal locating device if it is necessary to leave the airplane after an accident. Access the unit as described below and set the ELT transmitter control switch to the ON position.

1. Remove avionics bay access panel along aft portion of RH fuselage or lower aft center access panel of baggage compartment.
2. Disconnect fixed antenna lead from front of unit.
3. Disconnect lead from remote switch and indicator unit.
4. Disconnect antenna from mounting tray.
5. Loosen attach straps and remove transmitter unit.
6. Attach antenna to antenna jack on front of unit.
7. Set main control switch to ON position.
8. Hold antenna upright as much as possible.

Figure 18-1: Artex ELT 1000 System

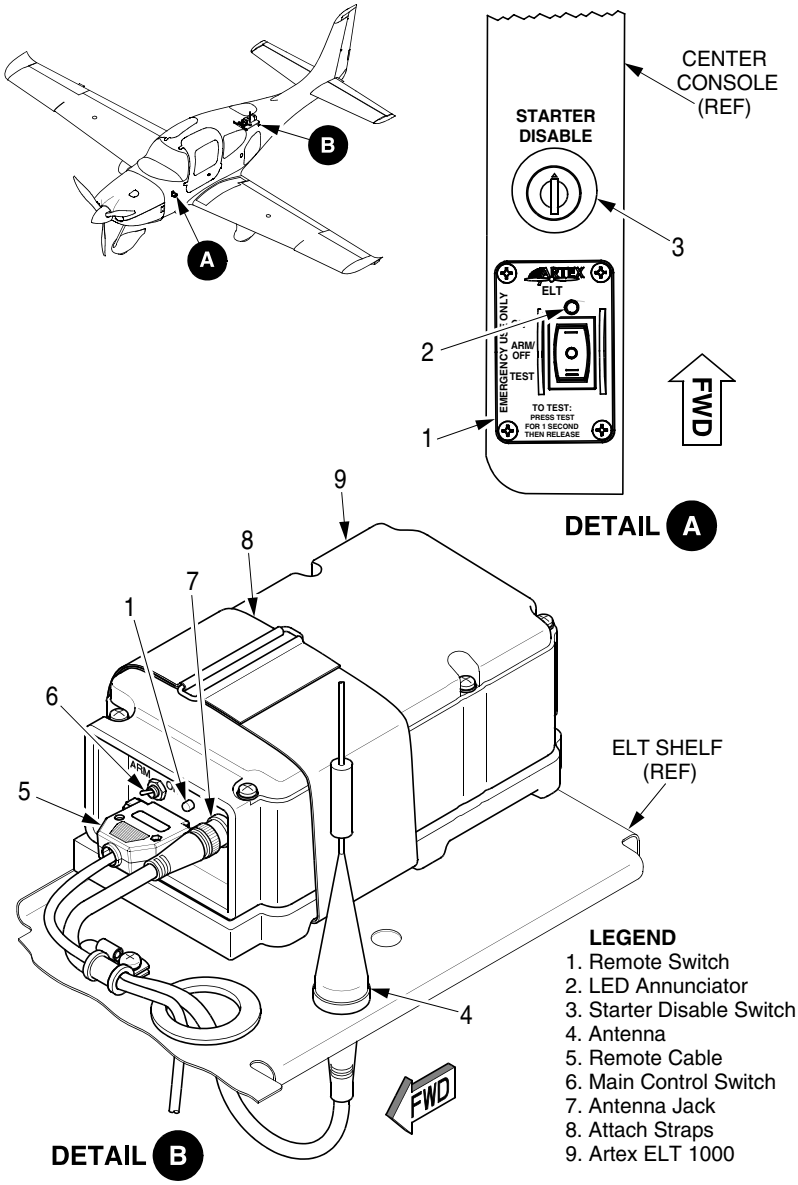

Fire Extinguisher

Overview

A liquefied-gas-type fire extinguisher is mounted on the forward inboard side of the copilot footwell. The extinguishing agent is Halon 1211 or Halotron BrX. The extinguisher is approved for use on class B (liquid, grease) and class C (electrical equipment) fires. A pin is installed through the discharge mechanism to prevent inadvertent discharge of extinguishing agent.

Serials w/ Halotron fire extinguisher: The fire extinguisher must be replaced after each use.

Serials w/ Halon fire extinguisher: The fire extinguisher must be replaced or refilled after each use.

Operation

To Operate Extinguisher

1. Release reclosable fastener strap and remove the extinguisher from its mounting bracket.
2. Hold the extinguisher upright and pull the pin.
3. Get back from the fire and aim nozzle at base of fire at the nearest edge.
4. Press lever and sweep side to side.

• WARNING •

The gas used in the fire extinguisher can be toxic, especially in a closed area. After discharging fire extinguisher, ventilate cabin by opening air vents and unlatching door. Close vents and door after fumes clear.

The extinguisher must be inspected before each flight to ensure that it is available, charged, and operable. The preflight inspection consists of ensuring that the nozzle is unobstructed, the pin has not been pulled, and the canister has not been damaged.

For preflight, charge can be determined by verifying the gauge pressure is in the operable (green) range, or by 'hefting' the unit.

Serials w/ Halon fire extinguisher: The unit should weigh approximately 2.5 lb (1.1 kg).

Serials w/ Halotron fire extinguisher: The unit should weigh approximately 3.0 lb (1.4 kg).

USB Ports

Overview

Four Universal Serial Bus (USB) charging ports are installed throughout the aircraft. Two ports are located in the forward center console storage cubby, and one port is located in the left and one in the right aft storage pocket.

There is no data or audio access at the ports. Power draw through each USB charging port must not exceed the output value specified on the port label.

All ports comply with USB Battery Charging 1.2 and are intended for USB-compatible devices only.

Serials 9750 thru 11110: One forward port is 60W and the remaining ports are 15W.

Serials 11111 and subs: Two possible USB port configurations are possible. The standard configuration consists of one 60W forward port, and the remaining ports are 15W. The optional upgrade configuration consists of two 60W forward ports and two 100W aft ports.

The 15W ports comply with USB Power Delivery 2.0.

The 60W and 100W ports comply with USB Power Delivery 3.0.

Power Source

Power for the USB ports is provided through the 7.5-amp CONV POWER circuit breaker on Main Bus 3.

Intentionally Left Blank

Chapter 19: Recovery System

Table of Contents

Recovery System 3
Cirrus Airframe Parachute System 3
Overview 3
Operation 4
Controls 5

Intentionally Left Blank

Recovery System

Cirrus Airframe Parachute System

The airplane is equipped with a Cirrus Airframe Parachute System (CAPS) designed to bring the airplane and its occupants to the ground in the event of a life-threatening emergency. The system is intended to save the lives of the occupants but will most likely destroy the airplane and may, in adverse circumstances, cause serious injury or death to the occupants. Because of this, it is important to carefully read Section 3: Emergency Procedures, Checklist and Section 10: Safety Information in the AFM to consider when and how you would use the system.

• WARNING •

The parachute system can be activated at any time. The solid-propellant rocket flight path is upward from the parachute cover. Stay clear of parachute canister area when airplane is occupied. Do not allow children in the airplane unattended.

Overview

The CAPS consists of a parachute, a solid-propellant rocket to deploy the parachute, a rocket activation handle, and a harness embedded within the fuselage structure.

A composite box containing the parachute and solid-propellant rocket is mounted to the airplane structure immediately aft of the baggage compartment bulkhead. The box is covered and protected from the elements by a thin composite cover.

The parachute is enclosed within a deployment bag that stages the deployment and inflation sequence. The deployment bag creates an orderly deployment process by allowing the canopy to inflate only after the rocket motor has pulled the parachute lines taut.

The parachute itself is a round canopy equipped with a slider, an annular-shaped fabric panel with a diameter significantly less than the open diameter of the canopy. The slider has Kevlar loops spaced around its perimeter.

The canopy suspension lines are routed through these loops so that the slider is free to move along the suspension lines. Since the slider is positioned at the top of the suspension lines near the canopy, at the beginning of the deployment sequence the slider limits the initial diameter of the parachute and the rate at which the parachute inflates. As the slider moves down the suspension lines, the canopy inflates.

A three-point harness connects the airplane fuselage structure to the parachute. The aft harness strap is stowed in the parachute canister and attached to the structure at the aft baggage compartment bulkhead. The forward harness straps are routed from the canister to firewall attach points just under the surface of the fuselage skin. When the parachute deploys, the forward harness straps pull through the fuselage skin covering from the canister to the forward attach points.

Operation

Deployment Characteristics

When the rocket launches, the parachute assembly is extracted outward due to rocket thrust and rearward due to relative wind. In approximately two seconds, the parachute will begin to inflate.

When air begins to fill the canopy, forward motion of the airplane will dramatically be slowed. This deceleration increases with airspeed but in all cases within the parachute envelope should be less than 3 g's. During this deceleration a slight nose-up may be experienced, particularly at high speed; however, the rear riser is intentionally snubbed short to preclude excessive nose-up pitch. Following any nose-up pitching, the nose will gradually drop until the airplane is hanging nose-low beneath the canopy.

Eight seconds after deployment, the rear riser snub line will be cut and the airplane tail will drop down into its final approximately level attitude. Once stabilized in this attitude, the airplane may yaw slowly back and forth or oscillate slightly as it hangs from the parachute. Descent rate is expected to be less than 1700 feet per minute with a lateral speed equal to the velocity of the surface wind. In addition, surface winds may continue to drag the airplane after ground impact.

• CAUTION •

Ground impact is expected to be equivalent to touchdown from a height of approximately 13 feet.

• NOTE •

The CAPS is designed to work in a variety of airplane attitudes, including spins. However, deployment in an attitude other than level flight may yield deployment characteristics other than those described above.

Controls

Activation Handle

CAPS is initiated by pulling the CAPS activation T-handle installed in the cabin ceiling on the airplane centerline just above the pilot's right shoulder.

Pulling the activation T-handle will activate the rocket and initiate the CAPS deployment sequence. To activate the rocket, two separate events must occur:

1. Pull the activation T-handle from its receptacle. Pulling the T-handle removes it from the o-ring seal that holds it in place and takes out the slack in the cable (approximately two inches [5 cm] of cable will be exposed). Once the slack is removed, the T-handle motion will stop and greater force will be required to activate the rocket.
2. Clasp both hands around activation T-handle and pull straight downward with a strong, steady, and continuous force until the rocket activates. A chin-up type pull works best. 45.0 pounds (20.4 kg) force, or greater, may be required to activate the rocket. The greater force required occurs as the cable arms and then releases the igniter switch plunger activating the electronic igniter.

• WARNING •

After maintenance has been performed or any other time the system has been safetied, operators must verify that the pin has been removed before flight.

Jerking or rapidly pulling on the activation T-handle greatly increases the pull forces required to activate the rocket.

Attempting to activate the rocket by pushing the activation T-handle forward and down limits the force that can be applied. Pulling the activation T-handle straight down generates the greatest force.

A maintenance safety pin is provided to ensure that the activation handle is not pulled during maintenance. However, there may be some circumstances where an operator may wish to safety the CAPS system; for example, the presence of unattended children in the airplane, the presence of people who are not familiar with the CAPS activation system in the airplane, or during display of the airplane.

The pin is inserted through the handle retainer and barrel locking the handle in the "safe" position. A "Remove Before Flight" streamer with the CAPS Deployment Checklist is attached to the pin.

Intentionally Left Blank

Chapter 20: Safe Return Autoland System

Table of Contents

Recovery System 3
Safe Return Autoland (If Installed) 3
Overview 3
Operation 3
Controls 5
Indications 5
Power Source 5

Intentionally Left Blank

Recovery System

Safe Return Autoland (If Installed)

Overview

The Safe Return Autoland system is designed to safely land the aircraft and its passengers on autopilot in the event the pilot becomes incapacitated. Because of this, it is important to carefully read the following section of the AFM to consider when and how to use the system.

- Section 2: Limitations
- Section 3: Emergency Procedures
- Section 3A: Abnormal Procedures
- Section 8: Handling and Servicing
- Section 10: Safety Information

The Safe Return Autoland panel is located aft of the CAPS handle, and includes a push button for activation, an indicator light which illuminates during activation, and an indicator light which illuminates when Safe Return Autoland is degraded or unavailable.

• WARNING •

Safe Return Autoland is not intended to handle or respond to failures in the plane's avionics, airframe, flight controls, or power/engine systems.

Operation

Activation

Safe Return Autoland can be activated by any of the following conditions:

- Automatic Level mode engaged for one minute.
- No pilot interaction with the avionics for 30 minutes.
- Emergency Descent Mode active and descends through 15,000 ft pressure altitude.
- Safe Return Autoland activation push button is pressed.

Once Safe Return Autoland is activated, the system enters a 10-second waiting period, and displays an EMER AUTOLAND ACTIVATING Warning with associated 'Emergency Autoland activating' aural alert to notify crew and passengers of impending Safe Return Autoland activation. At any time, including during the waiting period or when Safe Return Autoland is fully activated, AP Disconnect or the AP button on the AFCS mode controller can be pressed to cancel Safe Return Autoland.

• CAUTION •

If Safe Return Autoland is not canceled, the system will enter the Initial State of Safe Return Autoland mode.

Initial State

When Safe Return Autoland is in the initial state, the following occurs:

- The displays (PDF, MFD, and GTCs) switch to Safe Return Autoland mode.
- The system begins transmitting automated text-to-speech voice messages over automatically tuned COM frequencies, including the 121.5 MHz emergency frequency.
- The transponder squawks code 7700 and the ADS-B emergency/priority status subfield are set appropriately.
- IPS will be automatically activated if outside air temperatures are conducive to icing conditions.
- A destination airport runway is automatically selected.
- A route to the new destination is automatically generated and loaded into a flight plan.
- The MFD screen will inform the occupants of the proper way to contact Air Traffic Control, if required/desired.

Enroute

Safe Return Autoland continues to automatically manage aircraft flight path and speed, transponder and COM communications, ice protection activation status, passenger information screens, and potential routing updates that may be needed to navigate around terrain and/or weather.

Approach

During approach, flaps will be set to 50%. Upon reaching the Final Approach Fix (FAF), Safe Return Autoland will follow the GPS guidance to the destination runway. If Safe Return Autoland deems it is not safe to proceed with the approach prior to reaching the FAF (altitude/airspeed/track error outside of limits), it will enter a hold at the FAF and proceed to the destination runway after achieving proper setup for the final approach.

Landing

The flare and landing algorithm transitions from glide path, flare, align/de-crab, de-rotate, and roll out. The flare maneuver will apply crosswind control inputs to align the airplane with the runway. When touchdown is detected, the airplane will de-rotate and symmetrical braking will be applied. Directional control after touchdown will be accomplished via the yaw servo for as long as there is enough airspeed for rudder control to be effective.

Secure Airplane

After the airplane has stopped, Safe Return Autoland will automatically shut down the engine by removing power to the electric fuel pump and moving the mixture to the cutoff position. Instructions will then be provided on the displays and audio on how to safely exit the aircraft. Instructions for releasing the brakes to recover the airplane from the runway are provided via exterior and interior placards, and are also included in AFM Section 8: Handling and Servicing.

Controls

Safe Return Autoland push button - Used to initiate the Safe Return Autoland activation.

The Safe Return Autoland activation switch is a momentary contact push button. The Safe Return Autoland push button is located on the Safe Return Autoland panel aft of the CAPS handle.

Brake reset switch - Used to release the brakes after a Safe Return Autoland landing.

AP disconnect - Used to deactivate Safe Return Autoland.

GTC PTT -A push to talk button displayed on GTC1 during a Safe Return Autoland event which is used to allow passengers to communicate with ATC.

• **NOTE** •

The PTT buttons on either control stick remain active and viable as a means to allow passengers to communicate with ATC during a Safe Return Autoland event.

Indications

The Safe Return Autoland panel has two indicators:

1. Safe Return Autoland Activated Indicator
2. Safe Return Autoland Degraded/Unavailable Indicator

The Safe Return Autoland Activated Indicator illuminates green when Safe Return Autoland is activated. The Safe Return Autoland Degraded/Unavailable Indicator illuminates red when Safe Return Autoland capabilities are degraded or unavailable due to associated system failures.

When Safe Return Autoland is activated, the displays will switch to Safe Return Autoland mode. If the system is degraded or unavailable, the displays will instruct passengers to consider CAPS.

Power Source

The Safe Return Autoland push button is recessed in the panel to preclude inadvertent activation.

28 VDC for Safe Return Autoland operation is provided through 1-amp EMER AUTOLAND circuit breaker on Main Bus 1.

RELATED TABLE/FIGURE:

Refer to "Figure 20-1: Safe Return Autoland".

Figure 20-1: Safe Return Autoland

NOTE

1 Illuminated green when Safe Return Autoland is activated.

2 Illuminated red when Safe Return Autoland is degraded or unavailable.

LEGEND

1. Safe Return Autoland Activated Indicator
2. Safe Return Autoland Push Button
3. Safe Return Autoland Degraded/Unavailable Indicator

SR20_PM22_1131

Intentionally Left Blank

Chapter 21: Log of Supplements

Table of Contents

As Required

Applicable PIM Supplements should be inserted in this chapter.

This Log of Supplements shows all Cirrus Aircraft Supplements available for the aircraft at the corresponding date of the revision level shown in the lower left corner. A check mark in the Part Number column indicates that the supplement is applicable to the PIM. Any installed supplements not applicable to the PIM are provided for reference only.