FAA APPROVED
AIRPLANE FLIGHT MANUAL

for the CIRRUS SR20

with

Cirrus Perspective Touch+ Avionics System

FAA Approved in Normal Category based on 14 CFR 23. This document must be carried in the airplane at all times and be kept within the reach of the pilot during all flight operations.

THIS MANUAL INCLUDES THE MATERIAL REQUIRED TO BE FURNISHED TO THE PILOT BY 14 CFR 23 AND ADDITIONAL INFORMATION PROVIDED BY CIRRUS AIRCRAFT AND CONSTITUTES THE FAA APPROVED AIRPLANE FLIGHT MANUAL.

Model - Serial #: Registration #:

TC ODA Administrator, ODA-834662-CE, for

Manager, Flight Test & Human Factors Branch, AIR-710
Federal Aviation Administration

12 MAR 2025
Approved Date

Copyright © 2025 - All Rights Reserved
Cirrus Aircraft
4515 Taylor Circle
Duluth, MN 55811

List of Effective Pages

Use this page to determine the current effective date for each page in the AFM. Supplements are issued individually and are controlled by the Log of Supplements Page in Section 9.

Log of Revisions

REV NO	FAA APPROVAL	DATE	SUMMARY DESCRIPTION
Original Issue	Monica Merritt Mgr., AIR-712 25 Aug 2023	01 Aug 2023	Original Issue
Revision 1	Jay Yeakle, TC ODA Administrator ODA-834662-CE 12 Mar 2025	15 Jan 2025	Added Safe Return Autoland Content

Page	Status	Page	Status	Page	Status
CoverPage-i	Revision 1	2-13	Revision 1	3-17	Original Issue
CoverPage-ii	Revision 1	2-14	Revision 1	3-18	Original Issue
LOEP-1	Revision 1	2-15	Revision 1	3-19	Original Issue
LOEP-2	Revision 1	2-16	Revision 1	3-20	Original Issue
Frontmatter-1	Original Issue	2-17	Revision 1	3-21	Original Issue
Frontmatter-2	Original Issue	2-18	Revision 1	3-22	Original Issue
Frontmatter-3	Revision 1	2-19	Revision 1	3-23	Original Issue
Frontmatter-4	Original Issue	2-20	Revision 1	3-24	Original Issue
1-1	Revision 1	2-21	Revision 1	3-25	Revision 1
1-2	Revision 1	2-22	Revision 1	3-26	Revision 1
1-3	Original Issue	2-23	Revision 1	3-27	Original Issue
1-4	Original Issue	2-24	Revision 1	3-28	Revision 1
1-5	Original Issue	2-25	Revision 1	3-29	Revision 1
1-6	Original Issue	2-26	Revision 1	3-30	Original Issue
1-7	Revision 1	2-27	Revision 1	3-31	Revision 1
1-8	Revision 1	2-28	Revision 1	3-32	Revision 1
1-9	Original Issue	2-29	Revision 1	3-33	Revision 1
1-10	Original Issue	2-30	Revision 1	3-34	Revision 1
1-11	Original Issue	3-1	Revision 1	3-35	Revision 1
1-12	Original Issue	3-2	Revision 1	3-36	Revision 1
1-13	Original Issue	3-3	Original Issue	3-37	Revision 1
1-14	Original Issue	3-4	Original Issue	3-38	Revision 1
2-1	Revision 1	3-5	Original Issue	3-39	Revision 1
2-2	Revision 1	3-6	Original Issue	3-40	Revision 1
2-3	Original Issue	3-7	Original Issue	3-41	Revision 1
2-4	Original Issue	3-8	Original Issue	3-42	Revision 1
2-5	Original Issue	3-9	Revision 1	3A-1	Original Issue
2-6	Original Issue	3-10	Original Issue	3A-2	Original Issue
2-7	Original Issue	3-11	Original Issue	3A-3	Original Issue
2-8	Revision 1	3-12	Original Issue	3A-4	Original Issue
2-9	Revision 1	3-13	Original Issue	3A-5	Original Issue
2-10	Revision 1	3-14	Original Issue	3A-6	Original Issue
2-11	Revision 1	3-15	Original Issue	3A-7	Revision 1
2-12	Revision 1	3-16	Original Issue	3A-8	Revision 1

List of Effective Pages (Cont.)

Page	Status
3A-9	Original Issue
3A-10	Revision 1
3A-11	Revision 1
3A-12	Original Issue
3A-13	Revision 1
3A-14	Original Issue
3A-15	Original Issue
3A-16	Original Issue
3A-17	Original Issue
3A-18	Original Issue
3A-19	Original Issue
3A-20	Original Issue
3A-21	Original Issue
3A-22	Revision 1
3A-23	Revision 1
3A-24	Revision 1
3A-25	Revision 1
3A-26	Revision 1
3A-27	Revision 1
3A-28	Revision 1
3A-29	Revision 1
3A-30	Revision 1
3A-31	Revision 1
3A-32	Revision 1
4-1	Revision 1
4-2	Revision 1
4-3	Original Issue
4-4	Revision 1
4-5	Revision 1
4-6	Revision 1
4-7	Revision 1
4-8	Revision 1
4-9	Revision 1
4-10	Original Issue
4-11	Revision 1
4-12	Original Issue
4-13	Original Issue
4-14	Revision 1
4-15	Original Issue
4-16	Original Issue
4-17	Original Issue
4-18	Original Issue
4-19	Original Issue
4-20	Revision 1
4-21	Original Issue
4-22	Revision 1
4-23	Original Issue
4-24	Original Issue
4-25	Revision 1
4-26	Original Issue
4-27	Revision 1
4-28	Original Issue
5-1	Revision 1
5-2	Revision 1
5-3	Original Issue
5-4	Original Issue
5-5	Original Issue
5-6	Original Issue
5-7	Original Issue
5-8	Original Issue
5-9	Original Issue
5-10	Original Issue
5-11	Original Issue
5-12	Original Issue
5-13	Original Issue
5-14	Original Issue
5-15	Original Issue
5-16	Original Issue
5-17	Original Issue
5-18	Original Issue
5-19	Original Issue
5-20	Original Issue
5-21	Original Issue
5-22	Original Issue
5-23	Original Issue
5-24	Original Issue
5-25	Revision 1
5-26	Revision 1
5-27	Original Issue
5-28	Original Issue
5-29	Original Issue
5-30	Original Issue
5-31	Original Issue
5-32	Original Issue
5-33	Original Issue
5-34	Original Issue
5-35	Original Issue
5-36	Original Issue
5-37	Original Issue
5-38	Original Issue
5-39	Original Issue
5-40	Original Issue
6-1	Original Issue
6-2	Original Issue
6-3	Original Issue
6-4	Original Issue
6-5	Original Issue
6-6	Original Issue
6-7	Original Issue
6-8	Original Issue
7-1	Original Issue
7-2	Original Issue
8-1	Revision 1
8-2	Revision 1
8-3	Original Issue
8-4	Revision 1
8-5	Original Issue
8-6	Original Issue
8-7	Original Issue
8-8	Original Issue
8-9	Original Issue
8-10	Original Issue
8-11	Original Issue
8-12	Revision 1
8-13	Revision 1
8-14	Revision 1
8-15	Revision 1
8-16	Revision 1
8-17	Revision 1
8-18	Revision 1
8-19	Revision 1
8-20	Revision 1
8-21	Revision 1
8-22	Revision 1
8-23	Revision 1
8-24	Revision 1
8-25	Revision 1
8-26	Revision 1
8-27	Revision 1
8-28	Revision 1
8-29	Revision 1
8-30	Revision 1
8-31	Revision 1
8-32	Revision 1
8-33	Revision 1
8-34	Revision 1
9-1	Original Issue
9-2	Original Issue
10-1	Revision 1
10-2	Revision 1
10-3	Revision 1
10-4	Original Issue
10-5	Revision 1
10-6	Revision 1
10-7	Revision 1
10-8	Revision 1
10-9	Revision 1
10-10	Revision 1

SR20 Airplane Flight Manual (AFM)

Temporary Change

Information in this Temporary Change adds to, supersedes, or deletes information in the Airplane Flight Manual.

Affected Publications:	SR20 Airplane Flight Manual: • P/N 44763-001 Revision 1 **(FAA Approved)**
Filing Instructions:	Remove existing pages 3-33, 3-34, 3A-11 thru 3A-14, 3A-21, 3A-22 and discard. Insert the following replacement pages as required.
Purpose:	Add content to Emergency and Abnormal Procedures.

Affected Sections:

- Section 3 - Emergency Procedures
  - ESSENTIAL BUS VOLTS Warning
- Section 3A - Emergency Procedures
  - ALTERNATOR 1 CURRENT Caution
  - BATTERY 1 CURRENT Caution
  - MAIN BUS 1 Caution

TC ODA Administrator, ODA-834662-CE, for

Manager, Flight Test & Human Factors Branch, AIR-710
Federal Aviation Administration

13 NOV 2025
Approved Date

Intentionally Left Blank

SR20 Airplane Flight Manual (AFM)

Temporary Change

Information in this Temporary Change adds to, supersedes, or deletes information in the Airplane Flight Manual.

Affected Publications:	SR20 Airplane Flight Manual: • P/N 44763-001 Revision 1 **(FAA Approved)**
Filing Instructions:	Insert the following changes adjacent to the first page of each affected AFM section and retain until further notice. Insert this cover page adjacent to the last page of the List of Effective Pages and retain until further notice.
Purpose:	This AFM Temporary Change revises fire extinguisher information in affected sections.

Affected Sections:

- Section 3 - Emergency Procedures
  - Cabin Fire in Flight

TC ODA Administrator, ODA-834662-CE, for
Manager, Flight Test & Human Factors Branch, AIR-710
Federal Aviation Administration

02 DEC 2025
Approved Date

Intentionally Left Blank

Foreword

This Airplane Flight Manual (AFM) has been prepared by Cirrus to familiarize operators with the aircraft. Read this AFM carefully. It provides operational procedures that will ensure the operator obtains the performance published in the manual, data designed to allow the most efficient and safe use of the airplane, and basic information to assist in maintaining the airplane in airworthy condition.

• NOTE •

All limitations, procedures, maintenance & servicing requirements, and performance data contained in this AFM are mandatory for compliance with FAA operating rules and for continued airworthiness of the airplane.

This AFM includes the material required to be furnished to the pilot by the Code of Federal Regulations (CFRs) and additional information provided by Cirrus and constitutes the FAA Approved Airplane Flight Manual for the aircraft.

The Airplane Flight Manual

This AFM has been prepared using GAMA Specification #1 for Airplane Flight Manual, Revision 2, dated 18 October 1996 as the content model and format guide. However, some deviations from this specification were made for clarity. The AFM is presented in loose-leaf form for ease in inserting revisions and is sized for convenient storage. Tabbed dividers throughout the AFM allow quick reference to each section. Logical and convenient Tables of Contents are located at the beginning of each section to aid in locating specific data within that section. The AFM is divided into ten sections as follows:

Section 1 ..... General
Section 2 ..... Limitations
Section 3 ..... Emergency Procedures
Section 3A ..... Abnormal Procedures
Section 4 ..... Normal Procedures
Section 5 ..... Performance Data
Section 6 ..... Weight and Balance
Section 7 ..... Systems Description
Section 8 ..... Handling and Servicing
Section 9 ..... Log of Supplements
Section 10 ..... Safety Information

The data presented in this AFM is the result of extensive flight tests and is approved by the Federal Aviation Administration. However, as new procedures or performance data are developed, the AFM will be revised.

• NOTE •

It is the responsibility of the owner to ensure that the Airplane Flight Manual is current at all times. Therefore, it is very important that all revisions be properly incorporated into this AFM as soon as they become available.

Revising the Airplane Flight Manual

Two types of revisions may be issued for this manual: Temporary and Numbered.

Temporary revisions are printed on yellow paper, normally cover only one topic or procedure, and are issued to provide safety related information in a timely manner. All the information needed to properly file a temporary revision is included on the revision itself. Typically, a temporary revision is superseded and replaced by the next numbered revision.

Numbered revisions are printed on white paper, normally cover several subjects, and are issued as general updates to the AFM. Each numbered revision includes an “Instruction Sheet”, a “List of Effective Pages”, and a “Revision Highlights” page. The “Instruction Sheet” is intended to assist the manual holder in removing superseded pages and inserting new or superseding pages. The “List of Effective Pages” shows the issue or revision status of all pages in the AFM. The “Revision Highlights” page gives a brief description of changes made to each page in the current revision.

Identifying Revised Material

Each page in the AFM has the issue date at the lower inside corner opposite the page number and the revision level under the part number. Issue dates will correspond to the issue dates of the Original Issue, any revisions, or reissues on the List of Effective Pages. The Original Issue and its issue date will be listed on the List of Effective Pages. In the event that the majority of pages in the AFM are revised, Cirrus may determine that it is more effective to reissue the AFM. Reissues will be identified by the word “Reissue” followed by a letter indicating the reissue level; for example, “Reissue A” on the List of Effective Pages along with its issue date. Revisions will be identified by the word “Revision” followed by the revision number on the List of Effective Pages; for example, “Revision 2” (Original Issue, Revision 2) or “Revision B1” (Reissue B, Revision 1).

Revised material on a page can be identified by a change bar located at the outside page margin.

Revisions to the Airplane Flight Manual

AFM revisions, temporary revisions, and supplements can be downloaded from Cirrus at www.cirrusaircraft.com.

Paper copies of AFM revisions and supplements can be purchased from www.cirrusaircraft.com.

Supplements

The Supplements section (Section 9) of this AFM contains FAA Approved Supplements necessary to safely and efficiently operate the airplane when equipped with optional equipment not provided with the standard airplane or not included in the AFM. Supplements are essentially "mini-manuals" and may contain data corresponding to most sections of the AFM. Data in a supplement either adds to, supersedes, or replaces similar data in the basic AFM.

Section 9 includes a "Log of Supplements" page preceding all Cirrus Supplements produced for this airplane. The "Log of Supplements" page can be utilized as a "Table of Contents" for Section 9. If the airplane is modified at a non-Cirrus facility through an STC or other approval method, it is the owner's responsibility to ensure that the proper supplement, if applicable, is installed in the AFM and that the supplement is properly recorded on the "Log of Supplements" page.

FAA Approved AFM Supplements must be in the airplane for flight operations when the subject optional equipment is installed or the special operations are to be performed.

Retention of Data

In the event a new title page is issued, the weight and balance data changes, the equipment list changes, or the "Log of Supplements" is replaced, the owner must ensure that all information applicable to the airplane is transferred to the new pages and the aircraft records are current. It is not a requirement that owners retain information, such as supplements, that is not applicable to their airplane.

In the event a new AFM is purchased, the owner must ensure that all information applicable to the airplane is transferred to the new AFM and the aircraft records are current.

Warnings, Cautions, and Notes

Warnings, Cautions, and Notes are used throughout this AFM to focus attention on special conditions or procedures as follows:

• WARNING •

Warnings are used to call attention to operating procedures which, if not strictly observed, may result in personal injury or loss of life.

• CAUTION •

Cautions are used to call attention to operating procedures which, if not strictly observed, may result in damage to equipment.

• NOTE •

Notes are used to highlight specific operating conditions or steps of a procedure.

Airplane Serial Number Effectivity

For aircraft serial numbers with an alphabetical suffix, the letter designation should be ignored when reading effectivity notes in service and operating documents.

For example, "2491H" is the same as "2491" when referencing effectivity to determine applicable operation for this aircraft.

Section 1: General

Table of Contents

Introduction 3
The Airplane 7
Engine 7
Propeller 7
Hartzell 7
Fuel 7
Approved Fuel Grades 7
Oil 8
Maximum Certificated Weights 8
Specific Loadings 8
Terminology 9

Intentionally Left Blank

Introduction

This section contains information of general interest to pilots and owners. You will find the information useful in acquainting yourself with the airplane, as well as in loading, fueling, sheltering, and handling the airplane during ground operations. Additionally, this section contains definitions or explanations of symbols, abbreviations, and terminology used throughout this manual.

• **NOTE** •

For specific information regarding the organization of this Manual, revisions, supplements, and procedures to be used to obtain publications, see the "Foreword" section.

All liquid volumes referenced in this publication are expressed in United States Customary Units, e.g., U.S. Gallons.

Figure 1-1: Airplane Three View

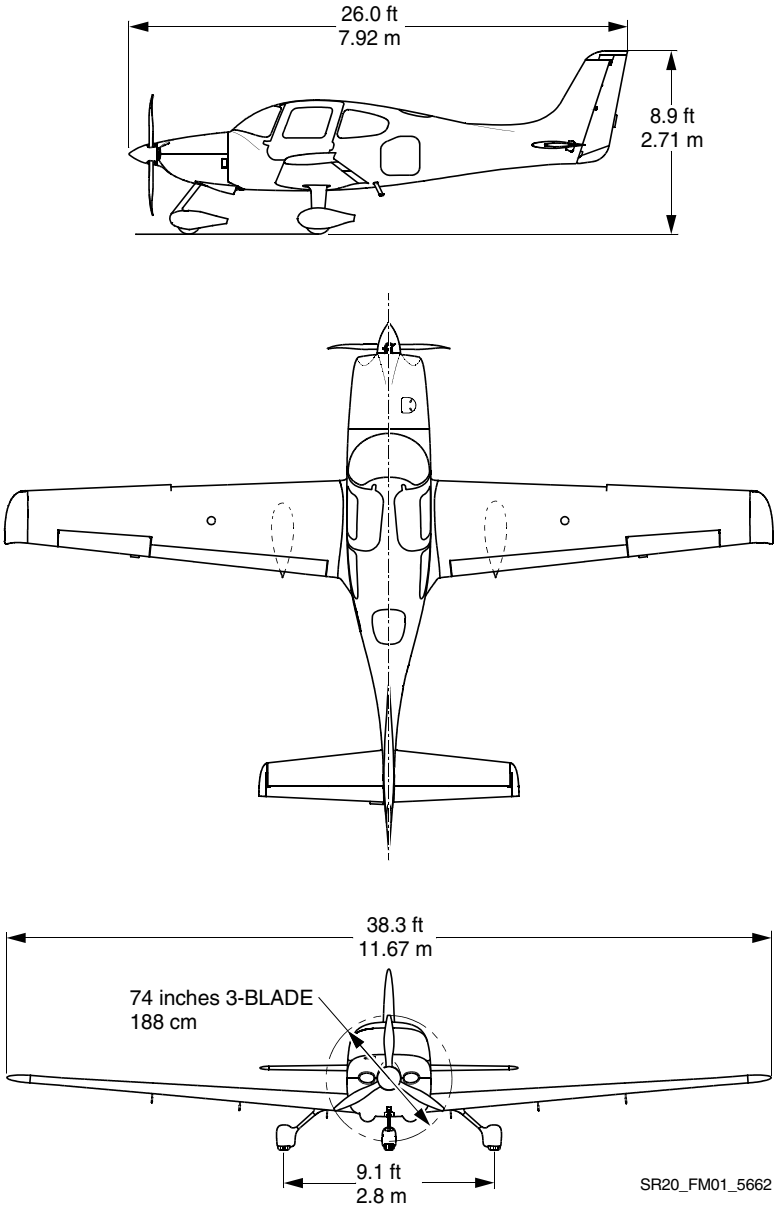

Figure 1-2: Airplane Interior Dimensions

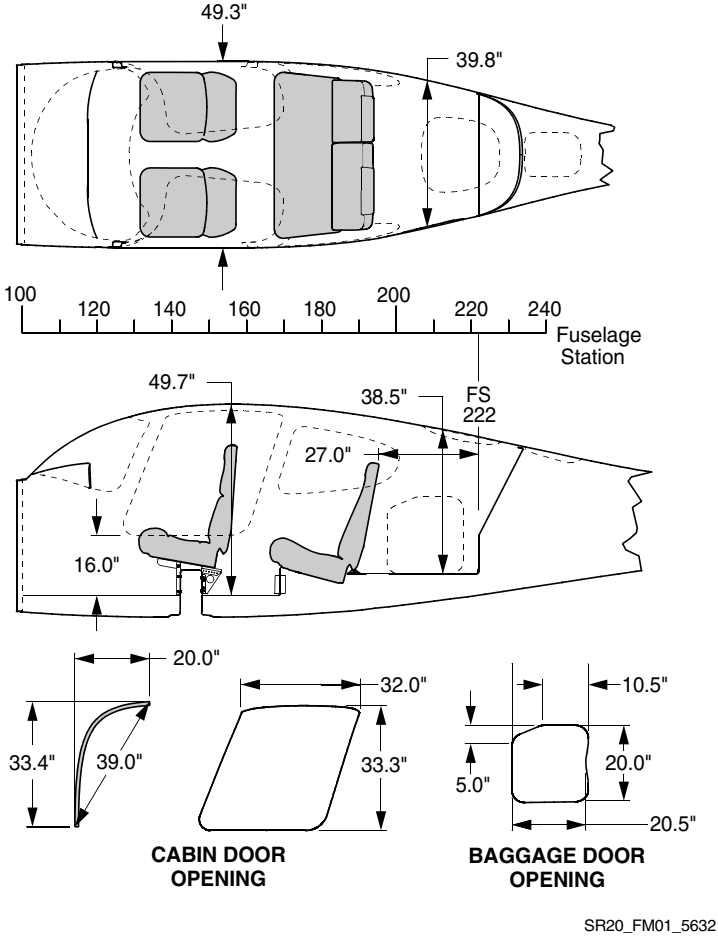

Location	Length	Width	Height	Volume
Cabin	122”	49.3”	49.7”	137 cu ft
Baggage Compartment	36”	39.8”	38.5”	32 cu ft

Figure 1-3: Turning Radius

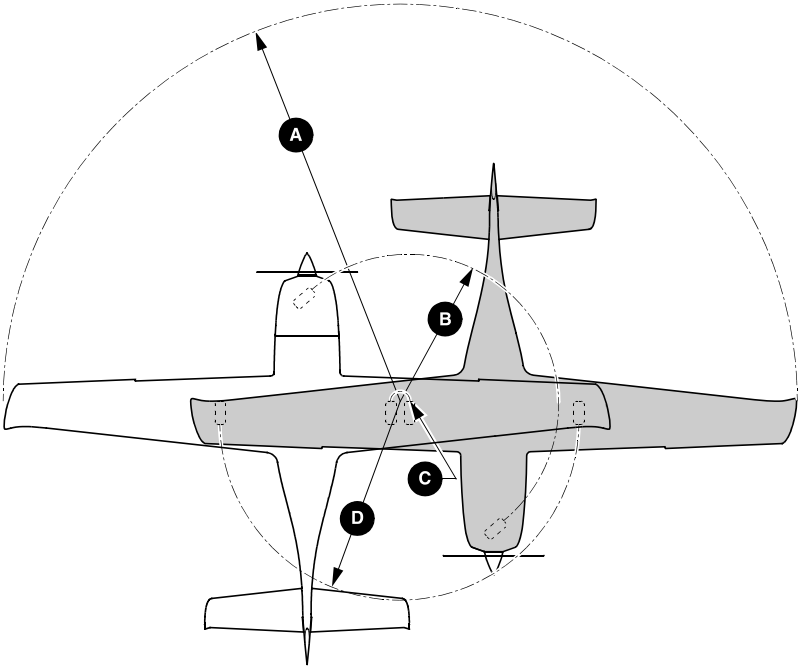

GROUND TURNING CLEARANCE

A	RADIUS FOR WING TIP	24.3 ft.	(7.41 m)
B	RADIUS FOR NOSE GEAR	7.0 ft.	(2.16 m)
C	RADIUS FOR INSIDE GEAR	0.5 ft.	(0.15 m)
D	RADIUS FOR OUTSIDE GEAR	9.1 ft.	(2.77 m)

TURNING RADII ARE CALCULATED USING ONE BRAKE AND PARTIAL POWER. ACTUAL TURNING RADIUS MAY VARY AS MUCH AS THREE FEET.

SR20_FM01_5398

The Airplane

Engine

Number of Engines 1
Number of Cylinders 4
Engine Manufacturer ..... Lycoming Engines
Engine Model IO-390-C3B6
Fuel Metering ..... Fuel Injected
Engine Cooling ..... Air Cooled
Engine Type ..... Horizontally Opposed, Direct Drive
Horsepower Rating ..... 215 HP @ 2700 RPM

Propeller

Hartzell

Propeller Type ..... Constant Speed

Three-Blade Propeller, Metal:

Model Number HC-E3YR-1RF/F7392S-1
Diameter ..... 74.0” (73.0” Minimum)
Refer to Section 2, Powerplant Limitations for servicing limitations.

Three-Blade Propeller, Composite:

Model Number 3C1-R919A1/76C03-2
Diameter ..... 74.0” Minimum

Fuel

Total Capacity ..... 58.5 U.S. Gallons (221.0 L)
Total Usable ..... 56.0 U.S. Gallons (212.0 L)

Approved Fuel Grades

100 LL Grade Aviation Fuel (Blue)
100 (Formerly 100/130) Grade Aviation Fuel (Green)

Oil

Oil Capacity (Sump) ..... 7 U.S. Quarts (6.6 L)

Refer to Section 2, Powerplant Limitations, for approved oil grades.

Maximum Certificated Weights

Maximum Takeoff Gross Weight ..... 3150 lb (1429 kg)

Maximum Baggage Compartment Loading ..... 130 lb (59 kg)

Specific Loadings

Wing Loading ..... 21.7 lb per square foot

Power Loading ..... 14.7 lb per HP

Terminology

Table 1: General Airspeed Terminology

General Airspeed Terminology	
Terminology	**Definition**
KCAS	Knots Calibrated Airspeed is the indicated airspeed corrected for position and instrument error.
KIAS	Knots Indicated Airspeed is the speed shown on the airspeed indicator. The IAS values published in this AFM assume no instrument error.
KTAS	Knots True Airspeed is the airspeed expressed in knots relative to undisturbed air which is KCAS corrected for altitude and temperature.
V_G	Best Glide Speed is the speed at which the greatest flight distance is attained per unit of altitude lost with power off.
V_O	Operating Maneuvering Speed is the maximum speed at which application of full control movement will not overstress the airplane.
$V_{FE_50\%}$	Maximum Flap Extended Speed (50%) is the highest speed permissible with wing flaps extended to the 50% position (typical of takeoff and approach)
$V_{FE_100\%}$	Maximum Flap Extended Speed (100%) is the highest speed permissible with wing flaps extended to the 100% position (typical of landing).
V_{NO}	Maximum Structural Cruising Speed is the speed that should not be exceeded except in smooth air, and then only with caution.
V_{NE}	Never Exceed Speed is the speed that may not be exceeded at any time.
V_{PD}	Maximum Demonstrated Parachute Deployment Speed is the maximum speed at which parachute deployment has been demonstrated.

General Airspeed Terminology (Continued)	
Terminology	**Definition**
V_{REF}	Landing reference speed or threshold crossing speed.
V_S	Stalling Speed is the minimum steady flight speed at which the aircraft is controllable.
V_{S0}	Stalling Speed is the minimum steady flight speed at which the aircraft is controllable in the landing configuration (100% flaps) at the most unfavorable weight and balance.
V_X	Best Angle of Climb Speed is the speed at which the airplane will obtain the highest altitude in a given horizontal distance. The best angle-of-climb speed normally increases slightly with altitude.
V_Y	Best Rate of Climb Speed is the speed at which the airplane will obtain the maximum increase in altitude per unit of time. The best rate-of-climb speed decreases slightly with altitude.

Table 2: Meteorological Terminology

Meteorological Terminology	
Terminology	**Definition**
IMC	Instrument Meteorological Conditions are meteorological conditions expressed in terms of visibility, distance from cloud, and ceiling less than the minima for visual flight defined in 14 CFR 91.155.
ISA	International Standard Atmosphere (standard day) is an atmosphere where (1) the air is a dry perfect gas, (2) the temperature at sea level is 15 °C, (3) the pressure at sea level is 29.92 in.Hg (1013.2 millibars).
MSL	Mean Sea Level is the average height of the surface of the sea for all stages of tide. In this AFM, altitude given as MSL is the altitude above the mean sea level. It is the altitude read from the altimeter when the altimeter's barometric adjustment has been set to the altimeter setting obtained from ground meteorological sources.

Meteorological Terminology (Continued)	
Terminology	**Definition**
OAT	Outside Air Temperature is the free air static temperature obtained from in-flight temperature indications or from ground meteorological sources. It is expressed in either °C or °F.
PA	Pressure Altitude is the altitude read from the altimeter when the altimeter's barometric adjustment has been set to 29.92 in.Hg (1013.21 mb) corrected for position and instrument error. In this Handbook, altimeter instrument errors are assumed to be zero.
Standard Temperature	Standard Temperature is the temperature that would be found at a given pressure altitude in the standard atmosphere. It is 59 °F (15 °C) at sea level pressure altitude and decreases approximately 4 °F (2 °C) for each 1000 feet of altitude increase. See ISA definition.

Table 3: Engine Power Terminology

Engine Power Terminology	
Terminology	**Definition**
HP	Horsepower is the power developed by the engine.
MCP	Maximum Continuous Power is the maximum power that can be used continuously.
MAP	Manifold Pressure is the pressure measured in the engine's induction system expressed as in.Hg.
RPM	Revolutions Per Minute is engine rotational speed.
Static RPM	Static RPM is RPM attained during a full-throttle engine runup when the airplane is on the ground and stationary.

Table 4: Performance and Flight Planning Terminology

Performance and Flight Planning Terminology	
Terminology	**Definition**
g	One "g" is a quantity of acceleration equal to that of earth's gravity.
Demonstrated Crosswind Velocity	Demonstrated Crosswind Velocity is the velocity of the crosswind component for which adequate control of the airplane during taxi, takeoff, and landing was demonstrated during certification testing. Demonstrated crosswind is not considered to be limiting.
Service Ceiling	Service Ceiling is the maximum altitude at which the aircraft at maximum weight has the capability of climbing at a rate of 100 feet per minute.
GPH	Gallons Per Hour is the amount of fuel (in gallons) consumed by the aircraft per hour.
NMPG	Nautical Miles Per Gallon is the distance (in nautical miles) which can be expected per gallon of fuel consumed at a specific engine power setting and/or flight configuration.
Unusable Fuel	Unusable Fuel is the quantity of fuel that cannot be safely used in flight.
Usable Fuel	Usable Fuel is the fuel available for flight planning.

Table 5: Weight and Balance Terminology

Weight and Balance Terminology	
Terminology	**Definition**
Reference Datum	Reference Datum is an imaginary vertical plane from which all horizontal distances are measured for balance purposes.
Fuselage Station	Fuselage Station (FS) is a location along the airplane fuselage measured in inches from the reference datum and expressed as a number. For example: A point 123 inches aft of the reference datum is FS 123.
CG	Center of Gravity is the point at which an airplane would balance if suspended. Its distance from the reference datum is found by dividing the total moment by the total weight of the airplane.
Arm	Arm is the horizontal distance from the reference datum to the center of gravity (CG) of an item. The airplane's arm is obtained by adding the airplane's individual moments and dividing the sum by the total weight.
Moment	Moment is the product of the weight of an item multiplied by its arm.
Basic Empty Weight	Basic Empty Weight is the actual weight of the airplane including all operating equipment that has a fixed location in the airplane. The basic empty weight includes the weight of unusable fuel and full oil.
MAC	Mean Aerodynamic Chord is the chord drawn through the centroid of the wing plan area.
LEMAC	Leading Edge of Mean Aerodynamic Chord is the forward edge of MAC given in inches aft of the reference datum (fuselage station).
Maximum Gross Weight	Maximum Gross Weight is the maximum permissible weight of the airplane and its contents as listed in the aircraft specifications.
Maximum Takeoff Weight	Maximum Takeoff Weight is the maximum weight approved for the start of the takeoff run.

Weight and Balance Terminology (Continued)	
Terminology	**Definition**
Useful Load	Useful Load is the basic empty weight subtracted from the maximum takeoff weight. It is the maximum allowable combined weight of pilot, passengers, fuel, and baggage.

Section 2: Limitations

Table of Contents

Introduction 3
Certification Status 3
Taxiing, Takeoff, and Landing Limitations 4
Operational Limits 4
Airspeed Limitations 4
Operating Speeds 4
Flap Speeds 4
Airspeed Indicator Markings 5
Powerplant Limitations 6
Engine 6
Fuel 6
Oil 6
Engine Instrument Markings & Annunciations 8
Powerplant 8
Fuel 9
Electrical 9
Weight Limits 10
Center of Gravity Limits 10
Maneuver Limits 12
Flight Load Factor Limits 12
Minimum Crew Requirements 12
Kinds of Operation 12
Kinds of Operation Equipment List 12
Maximum Operating Altitude Limits 16
Outside Air Temperature Limit 16
Takeoff Temperature 16
Maximum Occupancy 17
Serials w/ 2+1 Rear Seat 17
Child Restraint System Limits 17
Serials w/ Observer's Seat 17
Child Restraint System Limits 18
Serials w/o 2+1 Rear Seat or Observer's Seat 18
Systems and Equipment Limits 19
Flap Limitations 19
Icing 19
Autopilot 19

Minimum Autopilot Speed 19
Maximum Autopilot Speed 19
Minimum-Use-Height 19
Engagement Limits 20
Safe Return Autoland System (if installed) 20
Navigation and Communication Equipment 21
Attitude and Heading Reference System (AHRS) 21
Cirrus Perspective Touch+ Integrated Avionics System 22
Traffic Advisory System (TAS) 24
Navigation Map and Weather Map 24
SafeTaxi, Runway Occupancy Awareness, Taxiway Routing and Chartview (if installed) 24
Terrain Proximity Map 24
Synthetic Vision System (SVS) 25
Terrain Awareness Warning System (Optional) 25
Max Viz Enhanced Vision System (Optional) 25
Stormscope Weather Information System (Optional) 25
Air Conditioning System 26
Inflatable Restraint System 26
Cirrus Airframe Parachute System (CAPS) 26
Other Limitations 26
Smoking 26
Crew Communication 26
Placards 27
Exterior Placards 27
Interior Placards 29

Introduction

The limitations included in this Section of the Airplane Flight Manual (AFM) are approved by the Federal Aviation Administration.

This section provides operating limitations, instrument markings, and basic placards required by regulation and necessary for the safe operation of the aircraft and its standard systems and equipment.

• Note •

Compliance with the operating limitations in this section and in Section 9 is required by the Code of Federal Regulations.

For installed equipment described in an FAA Approved AFM Supplement, refer to Section 9: Log of Supplements of this AFM for amended operating limits.

Certification Status

The aircraft is certificated under the requirements of 14 CFR, Part 23, Airworthiness Standards: Normal Category, Part 36, Noise Standards, and Special Conditions prescribed by the Administrator.

Taxiing, Takeoff, and Landing Limitations

Operational Limits

This airplane may be operated on any smooth runway surface.

Maximum Tailwind for Takeoff and Landing..... 10 knots

Airspeed Limitations

Operating Speeds

Operating Maneuvering Speed (V_O) ..... 133 KIAS

Never Exceed Speed (V_{NE})..... 201 KIAS

Max. Structural Cruising Speed (V_{NO})..... 164 KIAS

Flap Speeds

Maximum flap extended speed, 50% ($V_{FE_50\%}$)..... 150 KIAS

Maximum flap extended speed, 100% ($V_{FE_100\%}$)..... 110 KIAS

Airspeed Indicator Markings

The airspeed indicator markings are based on Section 5, Airspeed Calibration - Normal Static Source Table. When using the alternate static source, allow for the airspeed calibration variations between the normal and alternate static sources.

Marking	Value (KIAS)	Remarks
White Arc	62 to 110	Full Flap Operating Range. Lower limit is the most adverse stall speed in the landing configuration. Upper limit is the maximum speed permissible with flaps extended.
Green Arc	71 to 164	Normal Operating Range. Lower limit is the maximum weight stall at most forward C.G. with flaps retracted. Upper limit is the maximum structural cruising speed (V_{NO}).
Yellow Arc	164 to 201	Caution Range. Operations must be conducted with caution and only in smooth air.
Red Arc	201	Never Exceed Speed (V_{NE}). Maximum speed for all operations.

Powerplant Limitations

Engine

Lycoming Engines..... IO-390-C3B6

Power Rating ..... 215 HP @ 2700 RPM

Maximum RPM .....2700 RPM

• **NOTE** •

Due to the mechanical design of the propeller governor, it is normal for the engine to temporarily exceed 2700 RPM during some phases of flight. If necessary, a slight reduction in throttle setting will decrease the RPM to keep the engine operating at or below 2700 RPM.

Power Lever Movement .....GREATER THAN 3 SECONDS FOR FULL RANGE

• **NOTE** •

Abrupt full range power lever movement can result in engine damage. Idle to maximum power movements of the power lever should be made slowly (approximately 3 seconds for full range motion).

Fuel

Approved Fuel..... Aviation Grade 100 LL (Blue) or 100 (Green)

Total Fuel Capacity..... 58.5 U.S. gallons (221.4 L)

Total Fuel Each Tank ..... 29.3 U.S. gallons (110.9 L)

Total Usable Fuel (all flight conditions) ..... 56.0 U.S. gallons (212.0 L)

Maximum Allowable Fuel Imbalance.....7.5 U.S. gallons (28.4 L)

The fuel pump must be set to ON for takeoff, climb, maneuvering flight, landing.

Oil

Maximum Oil Temperature ..... 235 °F (113 °C)

Minimum Oil Temperature for Takeoff..... 100 °F (38 °C)

Minimum Oil Pressure for Idling.....25 psi

Normal Operating Range of Oil Pressure ..... 55 - 95 psi

Maximum Oil Pressure for Starting, Warm up, Taxi, & Takeoff .....115 psi

Approved Oils:

Engine Break-In: For first 50 hours of operation or until oil consumption stabilizes, use straight mineral oil conforming to SAE J1966 or MIL-L-6082B SAE grades. If engine oil must be added to the factory-installed oil, add only SAE J1966 or MIL-L-6082B straight mineral oil.

After Engine Break-In: Use only oils conforming to SAE J1899 or MIL-L-22851 Ashless Dispersant SAE grades.

Recommended Oil Grades[a]				
	Engine Break-In		After Engine Break-In	
Ambient Air Temperature (SL)	Single Viscosity	Multi-Viscosity	Single Viscosity	Multi-Viscosity
All Temperatures	-	-	-	SAE 15W-50 SAE 20W-50
Above 80 °F (27 °C)	SAE 60	-	SAE 60	-
Above 60 °F (16 °C)	SAE 50	-	SAE 40 SAE 50	-
30 °F (-1 °C) to 90 °F (32 °C)	SAE 40	-	SAE 40	-
0 °F (-18 °C) to 70 °F (21 °C)	SAE 30	-	SAE 30 SAE 40	SAE 20W-40
Below 10 °F (-12 °C)	SAE 20	-	SAE 20 SAE 30	SAE 20W-30

a. For additional qualified oil grades and viscosities, refer to the Lycoming Service Instruction No. 1014.

• **NOTE** •

The correct grade of oil to be used is based on environmental conditions. If the aircraft is going to be flown into an area that is much warmer or colder than the aircraft is usually operated in, use a different viscosity of oil.

During operation, if the oil inlet temperatures are near the maximum permitted temperatures, then a higher viscosity oil can help to decrease the temperatures.

Engine Instrument Markings & Annunciations

The following describes the engine instrument markings.

Powerplant

Instrument (Range & Units)	Red Arc/Bar	Yellow Arc/Bar	Green Arc/Bar	Yellow Arc/Bar	Red Arc/Bar
	Lower Warning Range	Min. Caution Range	Normal Range	Max. Caution Range	Upper Warning Range
Cylinder Head Temperature (100 °F to 500 °F)	––	––	240 to 435	435 to 465	> 465
Engine Speed (0 to 3000 RPM)	––	––	500 to 2700	––	> 2700[a]
Exhaust Gas Temperature (500 °F to 1750 °F)	––	––	1000 to 1600	––	––
Manifold Pressure (10 to 35 Inch Hg)	––	––	15 to 29.5	––	––
Oil Pressure (0 to 115 PSI)	0 to 25[b]	25 to 55[b]	55 to 95	95 to 115	> 115[b]
Oil Temperature (75 °F to 250 °F)	––	––	100 to 235	––	> 235
Percent Power (0 to 100%)	––	––	0 to 100	––	––

a. Engine Speed Warning when RPM between 2710 and 2730 for more than 10 seconds OR when RPM greater than or equal to 2730 for more than 5 seconds.

b. Oil Pressure Caution when oil pressure is between 25 and 54 psi and RPM is greater than 1000. Oil Pressure Warning when oil pressure is below 25 psi, OR oil pressure is above 115 psi.

Fuel

Instrument (Range & Units)	Red Arc/Bar	Yellow Arc/Bar	Green Arc/Bar	Yellow Arc/Bar	Red Arc/Bar
	Minimum	Minimum Caution Range	Normal Range	Maximum Caution Range	Maximum
Fuel Flow (0 to 25 U.S. Gal/Hr)	––	––	0 to 21[a]	21[a] to 25	––
Fuel Quantity (0 to 28 U.S. Gallon)	0	0 to 10	10 to 28	––	––

a. Top of green arc dynamically changes based on altitude.

Electrical

Instrument (Range & Units)	Red Arc/Bar	Yellow Arc/Bar	Green Arc/Bar	Yellow Arc/Bar	Red Arc/Bar
	Minimum	Minimum Caution Range	Normal Range	Maximum Caution Range	Maximum
Essential Bus Volts (0 to 36 Volts)	0 to 24.4	––	24.5 to 32	––	> 32
Main Bus 1 Voltage (0 to 36 Volts)	––	0 to 24.4	24.5 to 32	––	> 32
Main Bus 2 Voltage (0 to 36 Volts)	––	0 to 24.4	24.5 to 32	––	> 32
Alternator 1 Current (0 to 100 Amps)	––	0 to 1[a]	2 to 100	––	––
Alternator 2 Current (0 to 100 Amps)	––	0 to 1[a]	2 to 100	––	––
Battery 1 Current (-80 to 80 Amps)	––	-80 to <-4[b]	-4 to 80	––	––

a. 20 second delay of Caution CAS message.
b. 30 second delay of Caution CAS message.

Weight Limits

Maximum Takeoff Weight ..... 3150 lb (1429 kg)
Maximum Landing Weight ..... 3150 lb (1429 kg)
Maximum Weight in Baggage Compartment ..... 130 lb (59 kg)

Center of Gravity Limits

CG Envelope	Weight (lb)	FS (inches)
Forward Light	2100	137.8
Forward Intermediate	2700	139.1
Forward Gross	3150	141.1
Aft Gross	3150	148.1
Aft Light	2100	148.1

Figure 2-1: Center of Gravity Envelope

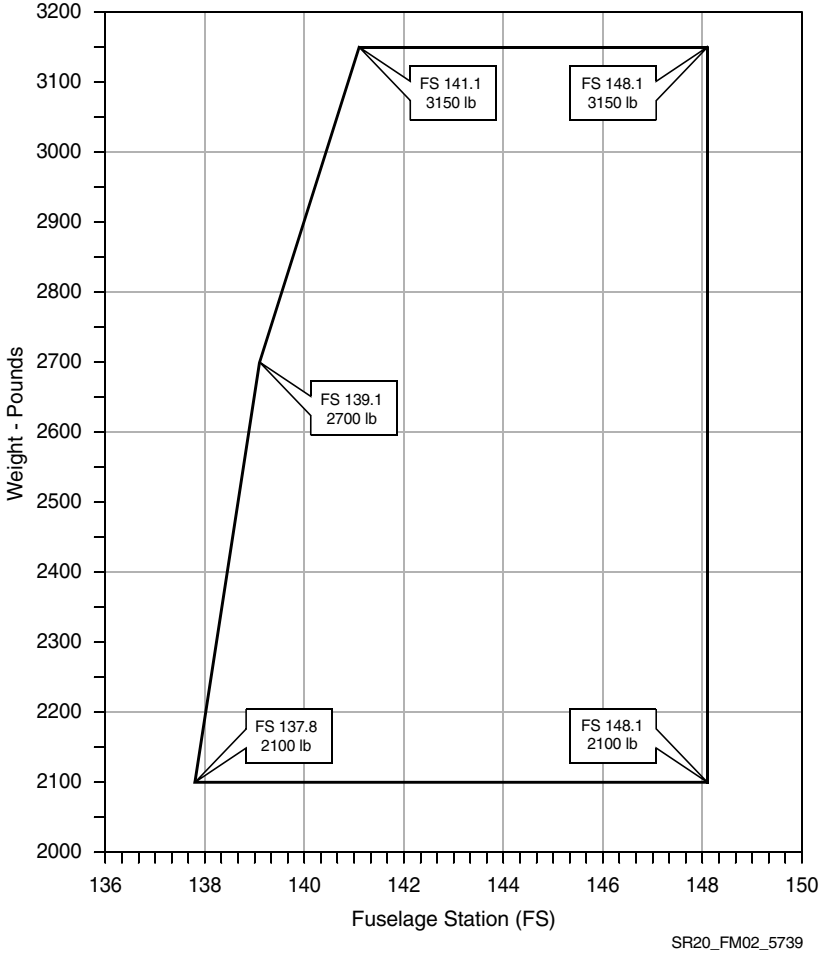

Maneuver Limits

Acrobatic maneuvers are prohibited.

Spins are prohibited.

This airplane is certified in the Normal category.

• **NOTE** •

Because the aircraft has not been certified for spin recovery, the Cirrus Airframe Parachute System (CAPS) must be deployed if the airplane departs controlled flight per 23-ACE-88. Refer to Section 3, Inadvertent Spin Entry.

Flight Load Factor Limits

Flaps UP (0%), any weight.....+3.8g, -1.9g

Flaps 50%, any weight ..... +1.9g, 0g

Flaps 100% (Down), any weight ..... +1.9g, 0g

Minimum Crew Requirements

The minimum flight crew is one pilot.

Kinds of Operation

The aircraft is equipped and approved for the following type operations:

- VFR day and night.
- IFR day and night.

Kinds of Operation Equipment List

The following listing summarizes the equipment required under Code 14 of Federal Regulations (CFR) Part 23 for airworthiness under the "listed kind of operation". Those minimum items of equipment necessary under the operating rules are defined in 14 CFR Part 91.

• **NOTE** •

All references to types of flight operations on the operating limitations placards are based upon equipment installed at the time of Airworthiness Certificate issuance.

System, Instrument and/or Equipment	Kinds of Operation				Remarks, Notes, and/or Exceptions
	VFR Day	VFR Night	IFR Day	IFR Night	
PLACARDS AND MARKINGS					
Airplane Flight Manual	1	1	1	1	
Garmin Cockpit Reference Guide	1	1	1	1	
COMMUNICATIONS					
VHF COM	A/R	A/R	1	1	
ELECTRICAL POWER					
Battery 1	1	1	1	1	
Battery 2	-	-	1	1	
Alternator 1	1	1	1	1	
Alternator 2	-	-	1	1	
Electrical Indications	1	1	1	1	
Circuit Breakers	A/R	A/R	A/R	A/R	As required.
EQUIPMENT & FURNISHINGS					
Emergency Locator Transmitter	1	1	1	1	
Egress Hammer	1	1	1	1	
Restraint System	A/R	A/R	A/R	A/R	One seat belt for each occupant.
Inflatable Restraints	-	-	-	-	
FIRE PROTECTION					
Fire Extinguisher	1	1	1	1	
FLIGHT CONTROLS					
Flap Position Indicator	1	1	1	1	
Flap System	1	1	1	1	

System, Instrument and/or Equipment	Kinds of Operation				Remarks, Notes, and/or Exceptions
	VFR Day	VFR Night	IFR Day	IFR Night	
Pitch Trim Indicator	1	1	1	1	
Pitch Trim System	1	1	1	1	
Roll Trim Indicator	1	1	1	1	
Roll Trim System	1	1	1	1	
Stall Warning System	1	1	1	1	
Stick Shaker	-	-	-	-	
FUEL					
Auxiliary Fuel Pump	1	1	1	1	
Fuel Quantity Indicators	2	2	2	2	
Fuel Selector Valve	1	1	1	1	
Automatic Fuel Selection	-	-	-	-	
ICE & RAIN PROTECTION					
Alternate Engine Air Induction System	1	1	1	1	
Alternate Static Air Source	1	1	1	1	
Pitot Heat	-	-	1	1	
LANDING GEAR					
Wheel Pants	-	-	-	-	May be removed.
LIGHTS					
Anticollision Lights	2	2	2	2	
Instrument Lights	-	1	-	1	
Navigation Lights	-	2	-	2	
Landing Light	-	1	-	1	For hire operations.

System, Instrument and/or Equipment	Kinds of Operation				Remarks, Notes, and/or Exceptions
	VFR Day	VFR Night	IFR Day	IFR Night	
Flash Light	-	1	-	1	
Ice Inspection Light	-	-	-	1	
NAVIGATION & PITOT STATIC					
Primary ADAHRS	1	1	2	2	
Standby ADAHRS	-	-	1	1	If installed.
Magnetic Compass	A/R	A/R	A/R	A/R	
Pitot System	1	1	1	1	
Static System, Normal	1	1	1	1	
VHF NAV	-	-	A/R	A/R	
GPS	-	-	A/R	A/R	
PFD/MFD	1	1	2	2	
Touchscreen Controller	1	1	2	2	
Marker Beacon Receiver	-	-	A/R	A/R	
Remote Audio Panel	A/R	A/R	1	1	
Transponder	1	1	1	1	
Radar Altimeter	-	-	-	-	If installed.
ENGINE INDICATING					
Cylinder Head Temperature	-	-	-	-	
Exhaust Gas Temperature	-	-	-	-	
Fuel Flow	1	1	1	1	
Manifold Pressure	1	1	1	1	
Oil Pressure	1	1	1	1	

System, Instrument and/or Equipment	Kinds of Operation				Remarks, Notes, and/or Exceptions
	VFR Day	VFR Night	IFR Day	IFR Night	
Oil Quantity (Dipstick)	1	1	1	1	
Oil Temperature	1	1	1	1	
Engine Speed	1	1	1	1	
SPECIAL EQUIPMENT					
Cirrus Airframe Parachute (CAPS)	1	1	1	1	
Safe Return Autoland System	-	-	-	-	

Maximum Operating Altitude Limits

Maximum Airport Elevation.....10,000 ft MSL

Maximum Operating Altitude .....17,500 ft MSL

The operating rules (CFR Part 91 and CFR Part 135) require the use of supplemental oxygen at specified altitudes below the maximum operating altitude.

Outside Air Temperature Limit

Takeoff Temperature

Minimum Takeoff Temperature ..... -40 °F (-40 °C)

Maximum Occupancy

Serials w/ 2+1 Rear Seat

Occupancy of this airplane is limited to “4+1” persons, the pilot and four passengers. If carrying three rear seat passengers, occupants must be wearing a seat belt and shoulder harness with their hips and back firmly against the seat back as shown in the following illustration. If three rear seat passengers cannot meet these requirements, occupancy is limited to four persons.

Child Restraint System Limits

1. Rear seat configuration for LATCH / ISOFIX compliant child seats is limited to two seats in the outboard positions.
2. A single non-LATCH / ISOFIX compliant seat may be installed in the center seat position.
3. Installation of three child seats in the rear seat is prohibited.

Figure 2-2: Rear Passenger Seat Arrangement

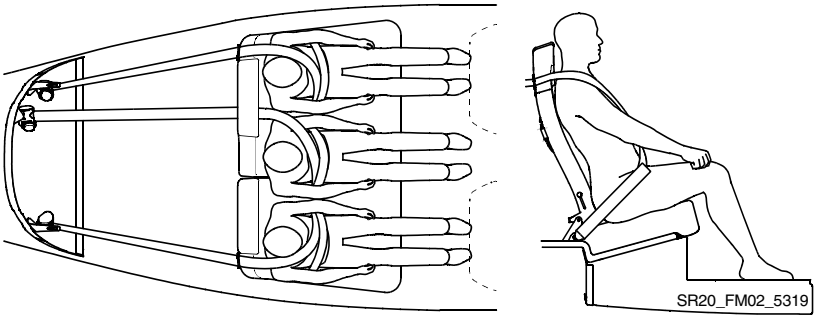

Serials w/ Observer’s Seat

Occupancy of this airplane is limited to three persons, the pilot and two passengers.

Child Restraint System Limits

1. Rear seat configuration for LATCH / ISOFIX compliant child seat is limited to the Observer's Seat.

Figure 2-3: Observer's Seat Arrangement

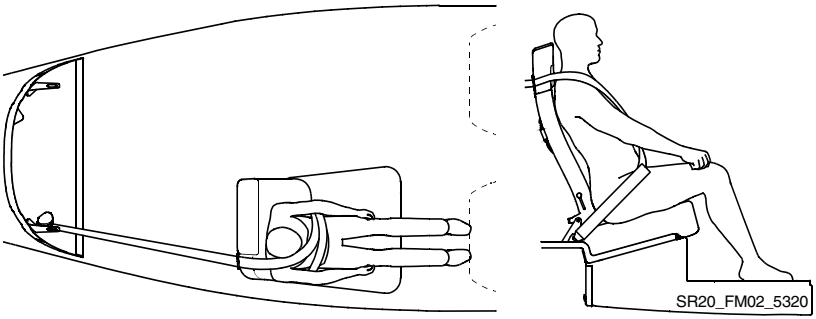

Serials w/o 2+1 Rear Seat or Observer's Seat

1. Occupancy of this airplane is limited to two persons, the pilot and one passenger.
2. Installation of child seat is prohibited.

Refer to the Pilot's Information Manual (PIM) for additional information.

Systems and Equipment Limits

The appropriate revision of the Cirrus Perspective Touch+ Cockpit Reference Guide (P/N 190-02954-XX, where X can be any digit from 0 to 9) must be immediately available to the pilot during flight. The system software version stated in the reference guide must be appropriate for the system software version displayed on the equipment.

Flap Limitations

Approved Takeoff Settings..... 50%

Approved Landing Settings.....UP, 50%, or 100%

Icing

Flight into known icing conditions is prohibited.

Autopilot

The Garmin GFC 700 Automatic Flight Control System (AFCS) has the following limitations:

Minimum Autopilot Speed

Flap Configuration	Minimum Autopilot Speed
UP	85 KIAS
50%	80 KIAS
100%	75 KIAS

Maximum Autopilot Speed

Flap Configuration	Maximum Autopilot Speed
UP	185 KIAS
50%	150 KIAS
100%	110 KIAS

Minimum-Use-Height

Takeoff and Climb.....400 feel AGL

Enroute and Descent..... 1,000 feet AGL

Approach (GP or GS Mode) ...Higher of 200 feet AGL or Approach MDA, DA, DH

Approach (FLC, VS, PIT or ALT Mode..... Higher of 400 feet AGL or Approach MDA)

Engagement Limits

The Autopilot may not be engaged beyond the Engagement Limits. If the Autopilot is engaged beyond the command limits (up to engagement limits), it will be rolled or pitched to within the command limits and an altitude loss of 1000 feet or more can be expected while attitude is established in the selected mode.

Axis	Autopilot Engagement Limit
Pitch	±50°
Roll	±75°

The Autopilot and Flight Director will not command pitch or roll beyond the Command Limits.

Axis	Autopilot Command Limit
FD Pitch Command Limits	+20°, -15°
FD Roll Command Limits	30°
FD Roll Command Limits	15°

Use of VNAV is not supported during an approach with a teardrop course reversal. VNAV will be disabled at the beginning of the teardrop.

Safe Return Autoland System (if installed)

The Safe Return Autoland system is for emergency situations only and must not be used when the pilot is able to land the aircraft.

Navigation and Communication Equipment

Attitude and Heading Reference System (AHRS)

Navigation using the Cirrus Perspective Touch+ Integrated Avionics System is prohibited in the following geographic areas.

Magnetic Cut-out Regions	Latitude	Longitude
North	North of 70° N	All longitudes (Northern Polar Region)
	North of 65° N	Between 75° W and 120° W (Northern Canada)
South	South of 70°	All longitudes (Southern Polar Region)
	North of 55° N	Between 120° E and 165° E (South of Australia and New Zealand)

Cirrus Perspective Touch+ Integrated Avionics System

1. IFR enroute and terminal navigation is prohibited unless the pilot verifies the currency of the database or verifies each selected waypoint for accuracy by reference to current approved data.
2. Instrument approach navigation predicated upon the GPS Receiver must be accomplished in accordance with approved instrument approach procedures that are retrieved from the GPS equipment database. The GPS equipment database must incorporate the current update cycle.

   a) Receiver Autonomous Integrity Monitoring (RAIM) must be available at the Final Approach Fix for instrument approach procedures that do not use the integrity information from Satellite Based Augmentation Systems (SBAS). For flight planning purposes, in areas where SBAS coverage is not available, the pilot must check RAIM availability.

   b) Accomplishment of ILS, LOC, LOC-BC, LDA, SDF, MLS or any other type of approach not approved for GPS overlay with the GPS receiver is not authorized.

   c) Use of the VOR/ILS receiver to fly approaches not approved for GPS requires VOR/ILS navigation data to be present on the display.

   d) Vertical Navigation information for approach procedures that do not meet the ICAO Annex 10 requirements for precision approaches may be utilized for advisory information only. Use of Vertical Navigation information for Instrument Approach Procedures does not guarantee step-down fix altitude protection, or arrival at approach minimums in normal position to land.

   e) IFR non-precision approach approval is limited to published approaches within the U.S. National Airspace System. Approaches to airports in other airspace are not approved unless authorized by the appropriate governing authority.

   f) RNAV approaches must be conducted utilizing the GPS sensor.

   g) The Cirrus Perspective Touch+ Integrated Avionics System is compliant with AC 90-100A. As such, the Cirrus Perspective Touch+ system is eligible to fly RNAV 'Q' or 'T' routes, RNAV SID/STAR/ODPs and eligible to use RNAV substitution or RNAV alternate means of navigation (US Only). Refer to AC 90-100A for additional operator requirements and limitations.

h) The Cirrus Perspective Touch+ Integrated Avionics System includes navigation sensors that meet the standards set forth in TSOC145d (Sensors) and (Display Units) for Class 3 system.

i) The Cirrus Perspective Touch+ Integrated Avionics System has been installed in accordance with AC 20-138A and is approved for navigation using GPS and SBAS (within the coverage of a Satellite Based Augmentation System complying with ICAO annex 10) for IFR enroute, terminal and approach operations.

j) The Cirrus Perspective Touch+ Integrated Avionics System complies with the standards set forth in AC 90-96A and JAA TGL-10 (rev 1) for BRNAV and PRNAV operations.

k) The navigation databases employed by the Cirrus Perspective Touch+ Integrated Avionics System meet the requirements set forth in AC 20-153 for database integrity, quality and database management practices. The data in the navigation databases are referenced to the WGS-84 reference system.

l) The Cirrus Perspective Touch+ Integrated Avionics System complies with the standards set forth in AMC 20-27 and NPA 2009-04 (AMC 20-28) for RNAV operations including LNAV/VNAV and LPV approach operations.

m) Barometric vertical navigation (Baro-VNAV) operations may be conducted if SBAS is unavailable or disabled. The Cirrus Perspective Touch+ Integrated Avionics System will provide automatic, temperature-compensated glidepath vertical guidance and has been shown to meet the accuracy requirements of VFR/IFR enroute, terminal, and approach Baro-VNAV operations within the conterminous US and Alaska in accordance with the criteria in AC 20-138D.

3. The installed ADS-B OUT system, including GTX 335 Mode S Transponder and GTX 345 Mode S UAT in Transponder (optional), has been shown to meet the equipment requirements of 14 CFR 91.227.
4. FIS-B Receiver Equipment, including GTX 345 Mode S UAT in Transponder (optional):

   a) Flight Information Services - Broadcast (FIS-B) information is intended to enhance pilot awareness of weather and airspace conditions. It does not replace positive two way communication when making safety critical weather or routing decisions. Use FIS-B

weather and National Airspace System (NAS) status information as follows:

(1) To aid pilot awareness of hazardous meteorological conditions and awareness of the regulatory status of the airspace.
(2) FIS-B information is meant to enhance flight planning only. It lacks sufficient resolution and updating necessary for tactical maneuvering.

Traffic Advisory System (TAS)

Use of the Traffic Advisory System (TAS) to maneuver the airplane to avoid traffic is prohibited. The TAS is intended for advisory use only. TAS is intended only to help the pilot to visually locate traffic. It is the responsibility of the pilot to see and maneuver to avoid traffic.

Navigation Map and Weather Map

The Navigation Map is intended only to enhance situational awareness. Use of the Navigation Map page for pilotage navigation is prohibited.

LTNG information on the Navigation Map or Weather Map is approved only as an aid to hazardous weather avoidance. Use of the Weather Map for hazardous weather penetration is prohibited.

SafeTaxi, Runway Occupancy Awareness, Taxiway Routing and Chartview (if installed)

Do not use SafeTaxi, Runway Occupancy Awareness, Taxiway Routing, or Chartview functions as the basis for ground maneuvering. SafeTaxi, Taxiway Routing, and Chartview functions have not been qualified to be used as an Airport Moving Map Display. SafeTaxi, Taxiway Routing, and Chartview are to only be used by the flight crew to orient themselves on the airport surface to improve pilot situational awareness during ground operations.

Terrain Proximity Map

The Terrain Proximity Map is intended only to enhance situational awareness. Use of the Terrain Proximity information for primary terrain avoidance is prohibited.

Synthetic Vision System (SVS)

Use of the Synthetic Vision System (SVS) for flight guidance, navigation, traffic avoidance, or terrain avoidance is prohibited. Maneuvering the airplane in any phase of flight such as taxi, takeoff, approach, landing, or roll out should not be predicated on SVS imagery. The synthetic vision system is not intended to be used independently of traditional attitude instrumentation. Consequently, SVS is disabled when traditional attitude instrumentation is not available. Otherwise, the traditional attitude instrumentation will always be visible in the foreground with SVS features in the background.

Terrain Awareness Warning System (Optional)

Use of the Terrain Awareness and Warning System for navigation and terrain avoidance is prohibited. The TAWS is intended to serve as a situational awareness tool only and may not provide the accuracy fidelity on which to solely base terrain or obstacle avoidance maneuvering decisions.

To avoid getting unwanted alerts, TAWS must be inhibited when landing at an airport that is not included in the airport database.

• **NOTE** •

Only vertical maneuvers are recommended responses to warnings and cautions unless operating in VMC or the pilot determines, using all available information and instruments, that a turn, in addition to the vertical escape maneuver, is the safest course of action. During certain operations, warning thresholds may be exceeded due to specific terrain or operating procedures. During day VFR flight, these warnings may be considered as cautionary.

Max Viz Enhanced Vision System (Optional)

1. Use of the Enhanced Vision System (EVS) for flight guidance, navigation, traffic avoidance, or terrain avoidance is prohibited. Maneuvering the airplane in any phase of flight such as taxi, takeoff, approach, landing, or roll out must not be predicated on EVS imagery.
2. The appropriate revision of the Max Viz Enhanced Vision System Information Manual, (p/n 309100024) must be available to the pilot during flight.

Stormscope Weather Information System (Optional)

1. Use of the Weather Information System for hazardous weather penetration is prohibited.
2. When option installed, the appropriate revision of the L-3 Avionics Systems WX500 Stormscope Series II Weather Mapping Sensor User's Guide, (p/n 009-11501-001) must be available to the pilot during flight.

Air Conditioning System

The use of Recirculation Mode during flight is prohibited.

Inflatable Restraint System

Use of a child safety seat with inflatable restraint system is prohibited.

Cirrus Airframe Parachute System (CAPS)

V_{PD} Maximum Demonstrated Deployment Speed ..... 133 KIAS

• **NOTE** •

Refer to Section 10, Cirrus Airframe Parachute System (CAPS) for additional CAPS guidance.

Other Limitations

Smoking

Smoking is prohibited in this airplane.

Crew Communication

One headset which satisfies the requirements of TSO C139() or a microphone which satisfies the requirements of TSO C58 must be available for pilot use when operations require two-way communications.

Placards

Exterior Placards

Figure 2-4: Placards (1 of 4)

Engine compartment, inside oil filler access:

OIL

CAPACITY: 7 U.S. QUARTS (6.6 LITERS)

AFTER BREAK-IN: USE ASHLESS DISPERSANT OIL

SAE 15W50 OR SAE 20W50 ACCEPTABLE FOR ALL TEMPERATURES

REFER TO AFM FOR APPROVED OILS AND OTHER ACCEPTABLE VISCOSITIES AT VARIOUS TEMPERATURES

Wing, adjacent to fuel filler caps:

Upper fuselage, either side of CAPS rocket cover:

WARNING!

ROCKET FOR PARACHUTE DEPLOYMENT INSIDE

STAY CLEAR WHEN AIRPLANE IS OCCUPIED

SR20_FM02_5410

Figure 2-4: Placards (2 of 4)

Left fuselage, on external power supply door:

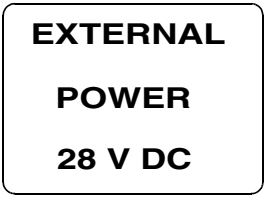

Doors, adjacent to latch:

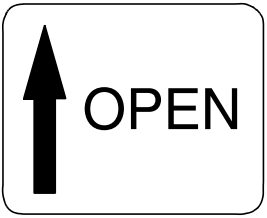

SR20_FM02_5411A

Interior Placards

Figure 2-4: Placards (3 of 4)

Baggage Compartment, aft edge:

ELT LOCATED BEHIND BULKHEAD
REMOVE CARPET AND ACCESS PANEL

Cabin Door Window, lower edge, centered, applied upside down:

RESCUE: FRACTURE AND REMOVE WINDOW

Cabin Window, above door latch:

EMERGENCY EXIT
REMOVE EGRESS HAMMER FROM WITHIN CENTER ARMREST LID. STRIKE CORNER OF WINDOW. KICK OR PUSH OUT AFTER FRACTURING

Baggage Compartment Door, inside:

DISTRIBUTED FLOOR LIMIT 130 LBS

BAGGAGE STRAP CAPACITY IS 35 LBS EACH MAXIMUM

SEE AIRPLANE FLIGHT MANUAL FOR BAGGAGE TIE-DOWN AND WEIGHT AND BALANCE INFORMATION

SR20_FM02_5775

Figure 2-4: Placards (4 of 4)

CAPS Overhead Placard :

SR20_FM02_5776A

Serials w/ Safe Return Autoland: Placard stating “EMERGENCY USE ONLY” must appear adjacent to activation button.

Section 3: Emergency Procedures

Table of Contents

Introduction 3
Crew Alert System (CAS) Messaging 3
Warnings 3
CAPS Guidance 3
Preflight Planning 4
Preflight Inspections/Maintenance 4
Methodology 4
Maintain Aircraft Control 4
Analyze the Situation 4
Take Appropriate Action 4
Land as Soon as Conditions Permit 5
Circuit Breakers 5
Memory Items 5
Procedure Division Symbols 6
Landing Guidance 6
Land as Soon as Practicable 6
Land as Soon as Possible 6
Airspeeds for Emergency Operations 7
Maneuvering Speed 7
Best Glide (Flaps: UP) 7
Emergency Landing 7
Glide 8
Best Glide Speed 8
Emergency Procedures 9
Automatic Flight Control Malfunction (Autopilot, ESP, Flaps, Throttle, Mixture) 9
Cabin Fire In Flight 9
CAPS Deployment 11
Ditching 12
Emergency Descent 13
Emergency Engine Shutdown On Ground 13
Emergency Ground Egress 14
Emergency Landing w/o Power 15
Engine Failure in Flight 16
Engine Failure On Takeoff - Low Altitude 17
Engine Fire During Start 18

Engine Fire In Flight 18
Engine Partial Power Loss 19
Inadvertent Spin Entry 21
Landing Without Elevator Control 22
Power Lever Linkage Failure 23
Propeller Governor Failure 24
Rejected Takeoff 24
Smoke and Fume Elimination 25
Wing Fire In Flight 26
Emergency CAS Procedures 27
APPROACH SPEED Warning 27
AUTO DESCENT Warning 28
CHT Warning 30
CO LEVEL HIGH Warning 31
EMER AUTOLAND ACTIVATING Warning 32
ESSENTIAL BUS VOLTS Warning 33
FUEL IMBALANCE Warning 35
FUEL LOW LEFT Warning 35
FUEL LOW RIGHT Warning 35
FUEL LOW TOTAL Warning 36
MAIN BUS 1 VOLTS Warning 36
MAIN BUS 2 VOLTS Warning 37
OIL PRESSURE Warning 38
OIL TEMP Warning 38
RPM Warning 39
SPIN SPIN SPIN Warning 40
STALL Warning 41
STALL WARNING FAIL Warning 41
STARTER ENGAGED Warning 42

Emergency Procedures

Cabin Fire In Flight

Added warning following fire extinguisher activation step.

• WARNING •

Serials w/ Halotron fire extinguisher: **The fire extinguisher should only be used in one second blasts. If the fire is not extinguished following one second blasts, use as required to extinguish the fire. Inhalation of the complete discharge of the fire extinguisher may result in cardiotoxicity and/or anesthetic effects to the occupants.**

Intentionally Left Blank

Introduction

This section provides procedures for handling emergencies and critical flight situations that may occur while operating the aircraft. Although emergencies caused by airplane, systems, or engine malfunctions are rare, the guidelines described in this section should be considered and applied as necessary should an emergency arise.

Emergency procedures associated with optional equipment are not described in this section.

Although this section provides procedures for handling most emergencies and critical flight situations that could arise in the aircraft, it is not a substitute for proper flight training, thorough knowledge of the airplane, and recognized piloting techniques and standards. A thorough study of the information in this handbook while on the ground will help you prepare for time-critical situations in the air.

• **NOTE** •

Refer to Section 9: Log of Supplements for optional equipment Emergency Procedures.

Crew Alert System (CAS) Messaging

Warnings

Displayed in red against a black background, Warning CAS messages arise during emergency situations that require immediate flight crew awareness and immediate flight crew response.

- A flashing Warning CAS message with an accompanying aural alert requires immediate action.
- A Warning CAS message with no accompanying aural alert requires attention, dependent on workload. It may also require performing maintenance or taking corrective action prior to next flight. Warnings with no aural alert typically occur while on ground.

CAPS Guidance

All Cirrus aircraft are equipped with a pilot or passenger activated ballistic airframe parachute system. The system is capable of lowering the aircraft and occupants safely to the ground for life threatening emergencies. CAPS provides pilots and passengers an alternative means of handling various life threatening emergency situations. In many cases CAPS may offer a safer option for occupants as compared to continued flight or traditional countermeasures. Pilots flying Cirrus aircraft must be properly trained and familiar with CAPS guidance, limitations, and operating procedures. Refer to Section 10, Cirrus Airframe Parachute System (CAPS), for CAPS deployment and guidance information.

Preflight Planning

Enroute emergencies caused by weather can be minimized or eliminated by careful flight planning and good judgment when unexpected weather is encountered.

Preflight Inspections/Maintenance

In-flight mechanical problems in the aircraft will be extremely rare if proper preflight inspections and maintenance are practiced. Always perform a thorough walk-around inspection before any flight to ensure that no damage occurred during the previous flight or while the airplane was on the ground. Pay special attention to any oil leaks or fuel stains that could indicate engine problems.

• NOTE •

Refer to Section 4: Normal Procedures, "Preflight Inspection" for more information.

Methodology

Aircraft emergencies are dynamic events. Because of this, it is impossible to enumerate every action a pilot should properly undertake in response to a particular situation. However, four basic actions can be applied to any emergency. They are:

Maintain Aircraft Control

Many minor aircraft emergencies turn into major ones when the pilot fails to maintain aircraft control. Do not panic and do not fixate on a particular problem. Over-attention to a warning light during an instrument approach can lead to a pilot-induced unusual attitude, and possibly worse. To avoid this, even in an emergency: always aviate, navigate, and communicate, in that order. Never let anything interfere with your control of the airplane. Never stop flying.

Analyze the Situation

Once you are able to maintain control of the aircraft, assess the situation. Read all warning and caution messages. Evaluate the engine parameters. Consider all aircraft operational information at your disposal.

Take Appropriate Action

In many situations, the procedures listed in this section will either correct or mitigate the aircraft problem or allow safe recovery of the aircraft. Follow them and use good pilot judgment.

The Cirrus Airframe Parachute System (CAPS) should be activated in the event of a life-threatening emergency where CAPS deployment is determined to be safer than continued flight and landing.

• NOTE •

Refer to Section 10, Cirrus Airframe Parachute System (CAPS) for CAPS deployment information and landing considerations.

Land as Soon as Conditions Permit

Once you have evaluated and responded to the emergency, assess your next move. Perform any non-critical "clean-up" items in the checklist and land as soon as practicable. Even if the airplane appears to be in sound condition, it may not be.

• NOTE •

Refer to Landing Guidance in this section for factors that determine landing criticality.

Circuit Breakers

Some procedures involve manipulating circuit breakers (CBs). The following criteria should be followed during "Circuit Breaker" steps:

- Intentional pulling of circuit breakers during flight, other than as required in specific procedures, may cause abnormal or unexpected system behavior and is not recommended.
- When instructed to "SET", the appropriate circuit breaker should be checked for normal condition. If the circuit breaker is not "SET", it may be reset only once. If the circuit breaker opens again, do not reset.
- When instructed to "PULL", the appropriate circuit breaker should only be pulled and not reset.
- When instructed to "CYCLE", the appropriate circuit breaker should be pulled, delayed for several seconds, and reset only once. Allow sufficient cooling time for circuit breakers that are reset through a "CYCLE" procedure.

Memory Items

Checklist steps emphasized by a rectangular enclosure, such as the example below, should be memorized for accomplishment without reference to the procedure, due to the nature of their urgency.

1. Mixture ..... CUTOFF

Procedure Division Symbols

For procedures requiring pilot decision, conditional steps are indented with a symbol to designate sub-sections within the procedure. On condition, the pilot makes a decision to identify the applicable sub-section.

Following the initial decision, a further sub-division of the procedure may occur. In that event, one or more additional conditions guides the pilot through the remaining decisions. Once the applicable condition(s) are identified, the pilot follows the remaining steps until the indication "Procedure Complete" is reached.

The procedure symbol levels are:

◆ First Level
  ❍ Second Level
    ❑ Third Level

Landing Guidance

Land as Soon as Practicable

The pilot may consider the convenience of future maintenance when selecting an airport to land as soon as practicable. Pilots must not overfly a suitable and practicable airport for other ground conveniences.

Land as Soon as Possible

The pilot must identify and land at the first available airport that allows for a safe approach and landing considering the approach procedures available, ceilings, visibility, winds and runway lengths

Airspeeds for Emergency Operations

Maneuvering Speed

3150 lb (1429 kg) .....133 KIAS
2700 lb (1225 kg) .....123 KIAS
2300 lb (1043 kg) .....114 KIAS

Best Glide (Flaps: UP)

3150 lb (1429 kg) .....100 KIAS
2600 lb (1179 kg) .....92 KIAS

Emergency Landing

Flaps UP .....89 KIAS
Flaps 50% .....83 KIAS
Flaps 100% .....78 KIAS

Glide

Conditions		Example	
Power	OFF	Altitude	8,000 ft. AGL
Propeller	Windmilling	Airspeed	Best Glide
Flaps	0% (UP)	Glide Distance	12 NM
Wind	Zero		

Best Glide Speed

3150 lb (1429 kg)..... 100 KIAS
2600 lb (1179 kg)..... 92 KIAS

Figure 3-1: Maximum Glide Ratio ~ 9 : 1

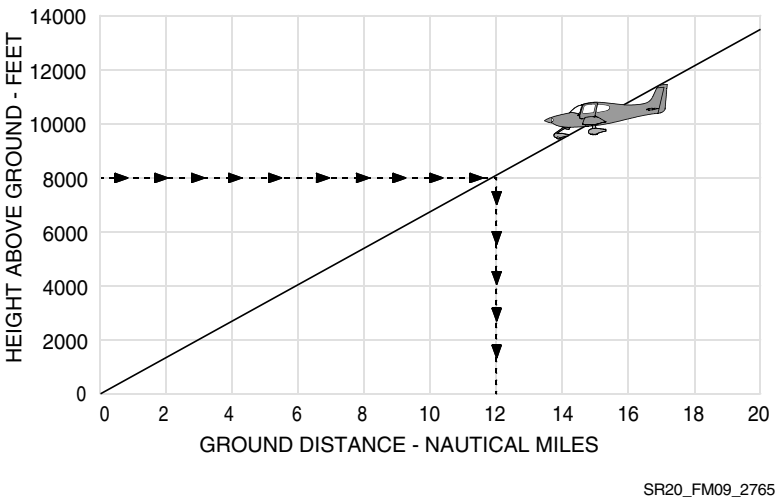

Emergency Procedures

Automatic Flight Control Malfunction (Autopilot, ESP, Flaps, Throttle, Mixture)

1. AP DISC Button ..... PRESS AND HOLD
2. AP SERVOS (A1), ENGINE SERVOS (C2), FLAPS (D4) CB PULL A/R
3. AP DISC Button ..... RELEASE
4. Land as soon as practicable.

Procedure Complete

Cabin Fire In Flight

1. BAT 1, ALT 1, and ALT 2 Switches ..... OFF
2. Fire Extinguisher ..... ACTIVATE AS REQUIRED
3. All other switches ..... OFF
4. Land as soon as possible.

◆ If setting BAT/ALT switches off eliminated source of fire or fumes and airplane is in night, weather, or IFR conditions:

a. Airflow Selector ..... OFF
b. BAT 1, ALT 1, and ALT 2 Switches ..... ON
c. Required Systems ..... ACTIVATE ONE AT A TIME
d. Temperature Selector ..... COLD
e. Vent Selector ..... FEET/PANEL/DEFROST POSITION
f. Airflow Selector ..... SET AIRFLOW TO MAXIMUM
g. Panel Vents ..... OPEN
h. Land as soon as possible.

Procedure Complete

• **NOTE** •

With both BAT and both ALT switches OFF, engine will continue to run. However, no electrical power will be available.

(Continued on next page)

(Continued)

• **NOTE** •

If the airplane is in IMC conditions, turn ALT 1, ALT 2, and BAT 1 switches OFF. Power from battery 2 will keep the Primary Flight Display operational for approximately 30 minutes. If airplane is in day VFR conditions and turning off the BAT/ALT switches eliminated the fire situation, leave the BAT/ALT switches OFF. Do not attempt to isolate the source of the fire by checking each individual electrical component.

If the cause of the fire is readily apparent and accessible, use the fire extinguisher to extinguish flames and land as soon as possible. Opening the vents or doors may feed the fire, but to avoid incapacitating the crew from smoke inhalation, it may be necessary to rid cabin of smoke or fire extinguishant.

If required to re-activate systems, pause several seconds between activating each system to isolate malfunctioning system. Continue flight to earliest possible landing with malfunctioning system off. Activate only the minimum amount of equipment necessary to complete a safe landing.

CAPS Deployment

• WARNING •

The maximum demonstrated deployment speed is 133 KIAS. Jerking or rapidly pulling the activation handle will greatly increase the pull forces required to activate the rocket. Use a firm and steady pulling motion – a "chin-up" type pull ensures successful activation.

1. Activation Handle.... PULL DOWN STEADILY WITH BOTH HANDS

• NOTE •

Wait for aircraft to stabilize beneath canopy before proceeding.

2. Mixture ..... CUTOFF
3. Fuel Selector ..... OFF
4. Fuel Pump ..... OFF
5. BAT 1, BAT 2, ALT 1, and ALT 2 Switches ..... OFF

   Turn the BAT/ALT switches off after completing any necessary radio communications.
6. Engine Knob ..... OFF
7. ELT ..... ON
8. Loose Items ..... SECURE
9. Seat Belts ..... TIGHTEN
10. Assume emergency landing body position.
11. After the aircraft comes to a complete stop, evacuate quickly and move upwind well clear of both aircraft and parachute.

Procedure Complete

• NOTE •

The Cirrus Airframe Parachute System (CAPS) should be activated immediately in the event of a spin. It should also be used in other life threatening emergencies where CAPS deployment is determined to be safer than continued flight and landing.

Expected impact in a fully stabilized deployment is equivalent to a drop from approximately 10 feet.

(Continued on next page)

(Continued)

• CAUTION •

CAPS deployment will likely result in damage or loss to the airframe.

• NOTE •

Several possible scenarios in which the activation of the CAPS would be appropriate are discussed in Section 10: Safety Information of this Handbook. These include:

- Mid-air collision
- Structural failure
- Loss of control
- Landing in inhospitable terrain
- Pilot incapacitation

All pilots should carefully review the information on CAPS activation and deployment in Section 10 before operating the aircraft.

Ditching

1. Radio ..... TRANSMIT (ATC OR 121.5 MHz) MAYDAY WITH LOCATION AND INTENTIONS
2. Transponder..... SQUAWK 7700
3. CAPS ..... ACTIVATE
4. Airplane .....EVACUATE
5. Flotation Devices (if available) ..... INFLATE WHEN CLEAR OF AIRPLANE

Procedure Complete

• WARNING •

It may be necessary to allow some cabin flooding to equalize pressure on the doors. If the doors cannot be opened, break out the windows with the egress hammer and crawl through the opening. Consider unlatching a door prior to assuming the emergency landing body position in order to provide a ready escape path.

• NOTE •

If available, life preservers should be donned and life raft should be prepared for immediate evacuation upon touchdown.

Emergency Descent

1. AP DISC Button ..... PRESS AND RELEASE
2. Power Lever ..... IDLE
3. Mixture ..... RICH (AS REQ'D)
4. Airspeed ..... INCREASE TO V_{NE}

Procedure Complete

• *CAUTION* •

If significant turbulence is expected, do not descend at indicated airspeeds greater than V_{NO}.

Emergency Engine Shutdown On Ground

1. Mixture ..... CUTOFF
2. Fuel Pump ..... OFF
3. Fuel Selector ..... OFF
4. Engine Knob ..... OFF
5. BAT/ALT Switches ..... OFF

Procedure Complete

Emergency Ground Egress

1. Mixture ..... CUTOFF
2. Fuel Pump ..... OFF
3. BAT 1 and BAT 2 Switches ..... OFF
4. Parking Brake ..... SET
5. Egress aircraft.

Procedure Complete

• WARNING •

While exiting the airplane, make sure evacuation path is clear of other aircraft, spinning propellers, and other hazards.

If the engine is left running, set the Parking Brake prior to evacuating the airplane.

If the doors cannot be opened, break out the windows with egress hammer, located in the console between the front seats, and crawl through the opening.

Emergency Landing w/o Power

1. Pitch for best glide.
2. Turn towards nearest practical landing site.
3. Radio..... TRANSMIT (ATC OR 121.5 MHz) MAYDAY WITH LOCATION AND INTENTIONS
4. Transponder .....SQUAWK 7700
5. Mixture..... CUTOFF
6. Fuel Pump ..... OFF
7. Fuel Selector..... OFF

◆ If landing site is improved:

a. Flaps..... AS REQUIRED
b. Seat Belt(s) .....SECURED
c. Touchdown ..... NORMAL TECHNIQUE

• WARNING •

If a safe landing is not assured, consider CAPS Deployment. Refer to Section 10, Cirrus Airframe Parachute System (CAPS) **for CAPS deployment scenarios and landing considerations.**

After landing:

d. BAT 1 and BAT 2 Switches ..... OFF
e. Evacuate airplane.

Procedure Complete

• WARNING •

If all attempts to restart the engine fail and a forced landing is imminent, select a suitable field and prepare for the landing. If flight conditions or terrain does not permit a safe landing, CAPS deployment may be required. Refer to Section 10, Cirrus Airframe Parachute System (CAPS) **for CAPS deployment scenarios and landing considerations. A suitable field should be chosen as early as possible so that maximum time will be available to plan and execute the forced landing. For forced landings on unprepared surfaces, use full flaps if possible. Be aware that use of full (100%) flaps will reduce glide distance. Full flaps should not be selected until landing is assured. Land on the main gear and hold the nose wheel off the ground as long as possible.**

Engine Failure in Flight

1. Fuel Pump ..... ON
2. Fuel Selector ..... SWITCH TANKS
3. Engine Knob ..... CHECK L, R, THEN BOTH (AS REQ'D)
4. Alternate Induction Air ..... ON
5. Power Lever ..... HALF OPEN
6. Mixture ..... .IDLE CUTOFF THEN SLOWLY ADVANCE UNTIL ENGINE STARTS
7. Starter (Propeller not windmilling) ..... ENGAGE
8. Mixture ..... TOP OF GREEN ARC

◆ If engine start is successful:

a. CHTs and Oil Temperature ..... WARM ENGINE AT PARTIAL POWER UNTIL IN GREEN ARC

b. Land as soon as practicable.

Procedure Complete

◆ If engine start is unsuccessful:

a. Perform Emergency Landing w/o Power Checklist.

Procedure Complete

• WARNING •

If engine failure is accompanied by fuel fumes in the cockpit, or if internal engine damage is suspected, move Mixture Control to CUTOFF, Fuel Selector to OFF, and do not attempt a restart.

If a turn back to the runway is elected, be very careful not to stall the airplane.

• NOTE •

If the engine fails at altitude, pitch as necessary to establish best glide speed. While gliding toward a suitable landing area, attempt to identify the cause of the failure and correct it. If altitude or terrain does not permit a safe landing, CAPS deployment may be required. Refer to Section 10, Cirrus Airframe Parachute System (CAPS) for CAPS deployment scenarios and landing considerations

Engine Failure On Takeoff - Low Altitude

1. Best Glide or Landing Speed ..... ESTABLISH
2. Fuel Selector ..... OFF
3. Flaps ..... AS REQUIRED
4. Land straight ahead.

◆ If time permits:

a. Power Lever ..... IDLE
b. Mixture ..... CUTOFF
c. Fuel Pump ..... OFF
d. Seat Belts ..... SECURED
e. BAT 1, BAT 2, ALT 1, and ALT 2 Switches ..... OFF

Procedure Complete

• WARNING •

If engine failure is accompanied by fuel fumes in the cockpit, or if internal engine damage is suspected, move Mixture Control to CUTOFF, Fuel Selector to OFF, and do not attempt a restart.
If a turn back to the runway is elected, be very careful not to stall the airplane.

• NOTE •

If the engine fails immediately after becoming airborne, abort on the runway if possible. If altitude precludes a runway stop but is not sufficient to restart the engine, lower the nose to maintain airspeed and establish a glide attitude. In most cases, the landing should be made straight ahead, turning only to avoid obstructions. After establishing a glide for landing, perform as many of the checklist items as time permits.

Delay turning off BAT 2 until immediately before impact. BAT 2 will provide power to the PFD and essential bus for continued display of flight instrumentation.

Engine Fire During Start

1. Mixture ..... CUTOFF
2. Fuel Pump ..... OFF
3. Fuel Selector ..... OFF
4. Power Lever ..... FORWARD
5. Starter ..... ENGAGE

◆ If flames persist:

a. Evacuate aircraft.

Procedure Complete

• NOTE •

A fire during engine start may be caused by fuel igniting in the fuel induction system. If this occurs, attempt to draw the fire back into the engine by continuing to crank the engine.

Engine Fire In Flight

1. Mixture ..... CUTOFF
2. Fuel Pump ..... OFF
3. Fuel Selector ..... OFF
4. Airflow Selector ..... OFF
5. Power Lever ..... IDLE
6. Engine Knob ..... OFF
7. Perform Emergency Landing w/o Power.

Procedure Complete

• WARNING •

If an engine fire occurs during flight, do not attempt to restart the engine.

• NOTE •

In the event of sustained engine fire in flight, airspeed and altitude indication may become unreliable.

Engine Partial Power Loss

1. Air Conditioner (if installed) ..... OFF
2. Fuel Pump ..... ON
3. Fuel Selector ..... SWITCH TANKS
4. Mixture ..... CHECK APPROPRIATE FOR FLIGHT CONDITIONS
5. Power Lever ..... SWEEP
6. Alternate Induction Air ..... ON
7. Engine Knob ..... CHECK L, R, THEN BOTH AS REQ'D
8. Land as soon as practicable.

Procedure Complete

• WARNING •

If there is a strong smell of fuel in the cockpit, divert to the nearest suitable landing field. Fly a forced landing pattern and shut down the engine fuel supply once a safe landing is assured.

• NOTE •

Indications of a partial power loss include fluctuating RPM, reduced or fluctuating manifold pressure, low oil pressure, high oil temperature, and a rough-sounding or rough-running engine. Mild engine roughness in flight may be caused by one or more spark plugs becoming fouled. A sudden engine roughness or misfiring is usually evidence of a magneto malfunction.

A gradual loss of manifold pressure and eventual engine roughness may result from the formation of intake ice. Opening the alternate engine air will provide air for engine operation if the normal source is blocked or the air filter is iced over.

(Continued on next page)

(Continued)

• NOTE •

Low oil pressure may be indicative of an imminent engine failure. See OIL PRESSURE Warning Checklist in this Section for special procedures with low oil pressure.

A damaged (out-of-balance) propeller may cause extremely rough operation. If an out-of-balance propeller is suspected, immediately shut down engine and perform Emergency Landing, Ditching, or Emergency Landing w/o Power Checklist as appropriate.

If the power loss is due to a fuel leak in the injector system, fuel sprayed over the engine may be cooled by the slipstream airflow which may prevent a fire at altitude. However, as the Power Lever is reduced during descent and approach to landing the cooling air may not be sufficient to prevent an engine fire.

Selecting fuel pump ON on may clear the problem if vapor in the injection lines is the problem or if the engine-driven fuel pump has partially failed. The electric fuel pump will not provide sufficient fuel pressure to supply the engine if the engine-driven fuel pump completely fails.

Selecting the opposite fuel tank may resolve the problem if fuel starvation or contamination in one tank was the problem.

Cycling the Engine Knob momentarily from BOTH to L and then to R may help identify the problem. An obvious power loss in single ignition operation indicates magneto or spark plug trouble. Lean the mixture to the recommended cruise setting. If engine does not smooth out in several minutes, try a richer mixture setting. Return Engine Knob to the BOTH position unless extreme roughness dictates the use of a single magneto.

If a partial engine failure permits level flight, land at a suitable airfield as soon as conditions permit. If conditions do not permit safe level flight, use partial power as necessary to set up a forced landing pattern over a suitable landing field. Always be prepared for a complete engine failure and consider CAPS deployment if a suitable landing site is not available. Refer to Section 10, Cirrus Airframe Parachute System (CAPS) for CAPS deployment scenarios and landing considerations.

Inadvertent Spin Entry

1. CAPS	ACTIVATE

Procedure Complete

• WARNING •

In all cases, if the aircraft enters an unusual attitude following or in connection with a stall, a spin condition should be assumed and, immediate deployment of the CAPS is required. Under no circumstances should spin recovery other than CAPS deployment be attempted.

• NOTE •

The aircraft is not approved for spins, and has not been certified for traditional spin recovery characteristics. The only approved and demonstrated method of spin recovery is activation of the Cirrus Airframe Parachute System (see CAPS Deployment Checklist, this section). Because of this, if the aircraft enters a spin, CAPS must be deployed immediately.

While the stall characteristics of the aircraft make inadvertent entry into a spin extremely unlikely, it is possible. Spin entry can be avoided by using good airmanship: coordinated use of controls in turns, proper airspeed control following the recommendations of this manual, and never abusing the flight controls with accelerated inputs when close to the stall (see Section 4, Stalls discussion).

If, at the stall, the controls are misapplied and abused aggressive inputs are made to the elevator, rudder and/or ailerons, an abrupt wing drop may be felt and a spin may be entered.

Landing Without Elevator Control

1. Flaps 50%
2. Trim ..... 80 KIAS
3. Power ..... AS REQUIRED FOR GLIDE ANGLE

Procedure Complete

• CAUTION •

The pitch trim spring cartridge is attached directly to the elevator and provides a backup should you lose the primary elevator control system. Set elevator trim for a 80 KIAS approach to landing. Thereafter, do not change the trim setting until in the landing flare. During the flare, the nose-down moment resulting from a power reduction may cause the airplane to hit on the nose-wheel. At touchdown, bring the power lever to idle.

Power Lever Linkage Failure

1. Power Lever Movement ..... VERIFY
2. Power ..... SET IF ABLE
3. Flaps ..... SET IF NEEDED
4. Mixture ..... AS REQUIRED (FULL RICH TO CUTOFF)
5. Land as soon as possible.

Procedure Complete

• NOTE •

If the Power Lever linkage fails in flight, the engine will not respond to power lever control movements. Use power available and flaps as required to safely land the airplane.

If the power lever is stuck at or near the full power position, proceed to a suitable airfield. Fly a forced landing pattern. With landing assured, shut down engine by moving mixture control full aft to CUTOFF. If power is needed again, return mixture control to full RICH and regain safe pattern parameters or go-around. If airspeed cannot be controlled, shut engine down and perform the Emergency Landing, Ditching, or Emergency Landing w/o Power Checklist as appropriate Checklist. After landing, bring the airplane to a stop and complete the Emergency Engine Shutdown On Ground Checklist.

If the power lever is stuck at or near the idle position and straight and level flight cannot be maintained, establish glide to a suitable landing surface. Fly a forced landing pattern.

Propeller Governor Failure

1. Power Lever..... REDUCE TO MINIMUM NECESSARY FOR SUSTAINED FLIGHT
2. Airspeed..... REDUCE TO 85-90 KIAS
3. Land as soon as practicable.

Procedure Complete

• NOTE •

An in-flight governor failure will likely result in a large exceedance (3000 RPM or more), as propeller blade angle will go to fine pitch. Failure may be evidence of engine oil pressure or volume loss, typically accompanied by OIL PRESSURE warning.

Propeller becomes a fixed pitch propeller; reducing speed to 85-90 KIAS and using only power necessary for sustained flight at that speed will minimize the overspeed.

Rejected Takeoff

1. Brakes..... MAXIMUM PILOT EFFORT W/O SKIDDING
2. Power Lever..... IDLE

After airplane comes to a complete stop:

3. Brakes..... COOL DOWN

Procedure Complete

• CAUTION •

For maximum brake effectiveness, retract flaps, hold side stick full back, and bring the airplane to a stop by smooth, even application of the brakes.

Do not set the parking brake following a Rejected Takeoff.

A cool down period and brake overheat inspection are required after high-energy braking events.

• NOTE •

Use as much of the remaining runway as needed to safely bring the airplane to a stop or to slow the airplane sufficiently to turn off runway.

Smoke and Fume Elimination

1. Air Conditioner ..... RECIRC DISABLED
2. Temperature Selector ..... COLD
3. Vent Selector ..... FEET/PANEL/DEFROST
4. Airflow Selector ..... MAXIMUM
5. Fuel Selector ..... MANUAL MODE

◆ If source of smoke and fume is firewall forward:

a. Airflow Selector ..... OFF

6. Panel Vents ..... OPEN
7. Land as soon as possible.

Procedure Complete

• NOTE •

If smoke and/or fumes are detected in the cabin, check the engine parameters for any sign of malfunction. If a fuel leak has occurred, actuation of electrical components may cause a fire. If there is a strong smell of fuel in the cockpit, divert to the nearest suitable landing field. Perform Emergency Landing, Ditching, or Emergency Landing w/o Power Checklist as appropriate Checklist and shut down the fuel supply to the engine once a safe landing is assured.

Wing Fire In Flight

1. Probe Heat Switch (if installed) .....OFF
2. PITOT HEAT (D2) Circuit Breaker..... PULL
3. NAV LIGHTS (D5) Circuit Breaker..... PULL
4. Landing Lights (LAND Switch) .....OFF
5. Strobe Lights (STRB Switch) .....OFF
6. AP DISC Button ..... PRESS AND HOLD
7. If possible, side slip to keep flames away from fuel tank and cabin.
8. Land as soon as possible.

Procedure Complete

• CAUTION •

Putting the airplane into a dive may blow out the fire. Do not exceed V_{NE} during the dive.

Emergency CAS Procedures

APPROACH SPEED Warning

APPROACH SPEED

Approach speed is too high.

1. Approach..... GO-AROUND
   Procedure Complete

AUTO DESCENT Warning

AUTO DESCENT

Automatic descent to 14,000FT in 60 seconds.
Aircraft descending to 14,000FT.
Aircraft descending to 12,500FT.
Aircraft descended due to pilot incapacitation.

1. Situation.....ASSESS

• WARNING •

Pilot should carefully assess aircraft state, altitude, location, and physiological fitness to maintain continued safe flight.

◆ If hypoxia is suspected and oxygen is available:

a. Oxygen Masks or Cannulas.....DON
b. Oxygen System.....ON
c. Oxygen Flow Rate.....MAXIMUM

◆If pilot is fit and autopilot has not begun descent:

a. Perform one or more of the following actions to reset hypoxia alert, as appropriate:
   - Press softkeys on GDUs, GTCs, or GMC 707
   - Press GTC Knob(s)
   - Acknowledge prompt(s) on GTC touchscreen(s)

◆If pilot is fit, autopilot is engaged, and a descent is initiated:

a. AP DISC.....PRESS
b. Selected Altitude ..... RESET TO DESIRED
c. Autopilot.....ENGAGE

Procedure Complete

• NOTE •

No pilot response to the HYPOXIA ALERT annunciation detected after one minute. Warning remains until pilot responds. Automatic descent begins after one minute of unanswered Warning. Once it begins, automatic descent will commence to 14,000 feet for 4 minutes, then to 12,500 feet thereafter. Once descent begins, only autopilot disconnect will interrupt this process.

(Continued on next page)

AUTO DESCENT

(Continued)

• NOTE •

Serials w/ Safe Return Autoland: Unless canceled, Safe Return Autoland will activate descending through 15,000 feet pressure altitude and change route to an emergency landing airport.

Refer to Section 10: Safety Information, "Pilot Incapacitation".

CHT Warning

CHT

Cylinder head temperature is high.

◆ If on ground:

a. Power Lever ..... REDUCE TO IDLE

b. Mixture ..... FULL RICH

c. Annunciations and Engine Temperatures ..... MONITOR

❍ If Warning annunciation is still illuminated, and temperatures not decreasing:

(1) Shutdown engine.
(2) Do not dispatch.

Procedure Complete

◆ If in flight:

a. Power Lever ..... REDUCE

b. Mixture ..... ADJUST TO TOP OF GREEN ARC

c. Airspeed ..... INCREASE

d. Annunciations and Engine Temperatures ..... MONITOR

❍ If Warning annunciation is still illuminated:

(1) Power Lever ..... MINIMUM REQUIRED
(2) Engine Instruments ..... MONITOR

❑ If Warning is extinguished and Caution is illuminated:

(a) Land as soon as practicable.

❑ If Warning annunciation remains illuminated:

(a) Land as soon as possible.

Procedure Complete

CO LEVEL HIGH Warning

CO LEVEL HIGH

Carbon monoxide level is too high.

1. Air Conditioner ..... RECIRC DISABLED
2. Temperature Selector ..... COLD
3. Vent Selector ..... FEET/PANEL/DEFROST
4. Airflow Selector ..... MAXIMUM
5. Panel Vents ..... OPEN

◆ If message does not extinguish:

a. Supplemental Oxygen (if available)

(1) Oxygen Masks or Cannulas ..... DON
(2) Oxygen System ..... ON
(3) Oxygen Flow Rate ..... MAXIMUM

b. Land as soon as possible.

Procedure Complete

• WARNING •

Annunciation indicates carbon monoxide level is greater than 50 PPM. Ensure that air condition is not in recirculate mode and that air temperature is set to full COLD to supply maximum amount of fresh air to cabin.

EMER AUTOLAND ACTIVATING Warning

EMER AUTOLAND ACTIVATING

Emergency Autoland is activating.

◆ If Safe Return Autoland activation is not desired:

a. AP DISC Button.....PRESS AND HOLD 1 SECOND

❍ If Safe Return Autoland activation has proceeded beyond 10-second EMER AUTOLAND ACTIVATING period:

• NOTE •

Safe Return Autoland will immediately squawk 7700, change the flight plan, and may change the altimeter setting.

(1) Transponder..... SET
(2) FMS ..... A/R
(3) Altimeter..... SET

❑ If system has deployed flaps:

(a) Flaps..... 50%

(b) Flaps..... A/R

Procedure Complete

❍ If malfunction of Safe Return Autoland activation is suspected:

(1) EMER AUTOLAND CB (A13) ..... PULL
(2) Perform Automatic Flight Control Malfunction checklist.

Procedure Complete

◆ If Safe Return Autoland activation is desired:

a. No further action required.

• NOTE •

Refer to Section 8: Handling and Servicing, "Safe Return Autoland Runway Recovery".

Procedure Complete

ESSENTIAL BUS VOLTS Warning

ESSENTIAL BUS VOLTS

Check essential power bus voltage.

1. Essential Bus Voltage (ESS Bus V) ..... CHECK

◆ If Essential Bus Voltage is greater than 32 Volts:

a. Main Bus 1 and Main Bus 2 Voltages ..... CHECK

❍ If Main Bus 1 voltage is high:

(1) ALT 1 (D11) Circuit Breaker ..... SET
(2) ALT 1 Switch ..... CYCLE

❍ If Main Bus 2 voltage is high:

(1) ALT 2 (B5) Circuit Breaker ..... SET
(2) ALT 2 Switch ..... CYCLE

◆ If unable to restore at least one alternator:

a. Non-Essential Loads ..... REDUCE

❍ If flight conditions permit, consider shedding:

(1) Air Conditioning ..... OFF
(2) Cabin Fan ..... OFF
(3) Landing Lights (LAND Switch) ..... OFF
(4) Probe Heat Switch (if installed) ..... OFF
(5) PITOT HEAT (D2) Circuit Breaker ..... PULL
(6) Strobe Lights (STRB Switch) ..... OFF
(7) COM 2/AUDIO PANL (C12) Circuit Breaker ..... PULL
(8) IRIDIUM DATA (B15) Circuit Breaker (if installed) ..... PULL

2. Land as soon as practicable.

Procedure Complete

(Continued on next page)

(Continued)

• CAUTION •

Dependent on battery state, flaps and landing light may be unavailable on landing.

• NOTE •

Essential Bus voltage is high or low. High voltage indicates alternator voltage regulator failure; will typically be associated with high M1 and/or M2 voltages and MAIN BUS 1 VOLTS Warning and/or MAIN BUS 2 VOLTS Warning messages. Low voltage indicates dual failures of Alternators 1 and 2, will typically be associated with low M1 and M2 voltages, MAIN BUS 1 VOLTS Caution and MAIN BUS 2 VOLTS Caution messages, and ALTERNATOR 1 CURRENT Caution and ALTERNATOR 2 CURRENT Caution messages.

FUEL IMBALANCE Warning

FUEL IMBALANCE

Fuel quantity imbalance has been detected.

1. Fuel Quantity Gauges ..... CHECK
2. Fuel Selector ..... SELECT FULLER TANK

Procedure Complete

• **NOTE** •

Fuel level imbalance (between left and right) is greater than 9.5 gallons. Leave the fuel selector cover open until tanks are balanced.

FUEL LOW LEFT Warning

FUEL LOW LEFT

Left fuel tank is nearly empty.

1. Fuel Quantity Gauges ..... CHECK
2. Fuel Selector ..... RIGHT TANK, LEAVE COVER OPEN

Procedure Complete

• **NOTE** •

Left fuel tank sensed quantity less than or equal to 1 gallon.

FUEL LOW RIGHT Warning

FUEL LOW RIGHT

Right fuel tank is nearly empty.

1. Fuel Quantity Gauges ..... CHECK
2. Fuel Selector ..... LEFT TANK, LEAVE COVER OPEN

Procedure Complete

• **NOTE** •

Right fuel tank sensed quantity is less than or equal to1 gallon.

FUEL LOW TOTAL Warning

FUEL LOW TOTAL

Total fuel quantity is low.

1. Fuel Quantity Gauges ..... CHECK
2. Totalized Fuel Quantity ..... CHECK

◆ If totalized fuel quantity differs significantly from sensed quantity:

a. Initial Fuel Value ..... VERIFY AND CORRECT

◆ If message persists:

a. Land as soon as practicable.

Procedure Complete

• NOTE •

Fuel Totalizer or sensed quantity is less than or equal to 7 gallons.

MAIN BUS 1 VOLTS Warning

MAIN BUS 1 VOLTS

Check main power bus 1 voltage.

1. ALT 1 Switch ..... CYCLE
2. Main Bus 1 Voltage ..... CHECK

◆ If Main Bus 1 Voltage is greater than 32 volts:

a. ALT 1 Switch ..... OFF

b. Perform ALTERNATOR 1 CURRENT Caution Checklist (do not reset alternator).

Procedure Complete

• NOTE •

Main Bus 1 Voltage is excessive, indicates an alternator 1 voltage regulator failure; will typically be associated with abnormally high voltage indications on M1, M2 and ESS buses, may also be associated with MAIN BUS 2 VOLTS Warning or ESSENTIAL BUS VOLTS Warning message.

MAIN BUS 2 VOLTS Warning

MAIN BUS 2 VOLTS

Check voltage on main power bus 2.

◆ If Main Bus 1 VOLTS Warning is also asserted:

a. Perform MAIN BUS 1 VOLTS Warning Checklist.

◆ If Main Bus 1 VOLTS Warning is not also asserted:

a. ALT 1 Switch ..... OFF
b. Main Bus 2 Voltage ..... CHECK
c. ALT 1 Switch ..... ON
d. Main Bus 1 Voltage ..... CHECK
e. Main Bus 2 Voltage ..... CHECK

◆ If Main Bus 2 Voltage is greater than 32 volts with ALT 1 off:

a. ALT 2 Switch ..... CYCLE
b. Main Bus 2 Voltage ..... CHECK

❍ If Main Bus 2 Voltage remains greater than 32 volts:

(1) ALT 2 Switch ..... OFF

Procedure Complete

• **NOTE** •

Main Bus 2 Voltage is excessive. Indicates an alternator voltage regulator failure; will typically be associated with abnormally high bus voltage indications on M2 and ESS, may also be associated with MAIN BUS 1 VOLTS Warning and ESSENTIAL BUS VOLTS Warning Messages.

OIL PRESSURE Warning

OIL PRESSURE

Oil pressure is out of range.

1. Oil Pressure Gauge.....CHECK

◆ If pressure low / high:

a. Power.....REDUCE TO MINIMUM FOR SUSTAINED FLIGHT

b. Land as soon as possible.

(1) Prepare for potential engine failure.

Procedure Complete

• NOTE •

It is possible for sensors to produce erroneous warnings. Carefully evaluate other engine parameters and smoothness of operation before taking action.

If oil pressure is low, the engine has probably lost a significant amount of its oil and engine failure may be imminent.

If oil pressure is suddenly high, a blockage or obstruction may have developed in the oil circulation system and engine failure may be imminent.

OIL TEMP Warning

OIL TEMP

Oil temperature is high.

1. Power ..... REDUCE
2. Airspeed.....INCREASE
3. Mixture ..... AS REQURED
4. Oil Temperature Gauge.....MONITOR

◆ If message persists:

a. Land as soon as possible.

Procedure Complete

RPM Warning

RPM

Check engine RPM.

1. Tachometer ..... CHECK

◆ If engine speed normal:

a. If on ground..... CORRECT PRIOR TO FLIGHT

b. If in flight .....CONTINUE, MONITOR

Procedure Complete

◆ If engine speed high:

a. Perform Propeller Governor Failure Checklist.

2. Oil Pressure Gauge ..... CHECK

Procedure Complete

SPIN SPIN SPIN Warning

SPIN SPIN SPIN

Spin Entry Detected – Initiate Recovery.

1. CAPS ..... ACTIVATE

Procedure Complete

• WARNING •

In all cases, if the aircraft enters an unusual attitude following or in connection with a stall, a spin condition should be assumed and, immediate deployment of the CAPS is required. Under no circumstances should spin recovery other than CAPS deployment be attempted.

• NOTE •

The aircraft is not approved for spins, and has not been certified for traditional spin recovery characteristics. The only approved and demonstrated method of spin recovery is activation of the Cirrus Airframe Parachute System (see CAPS Deployment Checklist, this section). Because of this, if the aircraft enters a spin, CAPS must be deployed immediately.

While the stall characteristics of the aircraft make inadvertent entry into a spin extremely unlikely, it is possible. Spin entry can be avoided by using good airmanship: coordinated use of controls in turns, proper airspeed control following the recommendations of this manual, and never abusing the flight controls with accelerated inputs when close to the stall (see Section 4, Stalls discussion).

If, at the stall, the controls are misapplied and abused aggressive inputs are made to the elevator, rudder and/or ailerons, an abrupt wing drop may be felt and a spin may be entered.

STALL Warning

STALL

Stall imminent.

1. Angle of Attack.....REDUCE
2. Power Lever ..... FULL FORWARD

Procedure Complete

STALL WARNING FAIL Warning

STALL WARNING FAIL

Stall warning is inoperative.

1. Airspeed ..... MAINTAIN ABOVE 1.3 V_S
2. Avoid stalls, low airspeed, and uncoordinated or abrupt control inputs.
3. Land as soon as practicable.

Procedure Complete

• WARNING •

The aircraft may not be stall protected. Stalls must be avoided when the stall warning is inoperative. Excessive altitude loss may result if the aircraft is stalled.

Departure from controlled flight or spin may occur during stall with uncoordinated aileron/rudder inputs.

Stall warning is not operative or reliable.

Stall speeds in turns or increased load factor are higher.

• Note •

Green donut airspeed reference will be unavailable or unreliable.

STARTER ENGAGED Warning

STARTER ENGAGED

Starter is engaged.

◆ If on ground:

a. Starter Button ..... RELEASE

❍ If starter does not disengage (stuck button, relay, or solenoid failure):

(1) Wait 1 minute before next start attempt.
(2) BAT 1 Switch ..... OFF
(3) Mixture ..... CUTOFF
(4) Fuel Pump ..... OFF
(5) STARTER (D1) Circuit Breaker ..... PULL

Procedure Complete

◆ If in flight:

a. STARTER (D1) Circuit Breaker ..... PULL

b. Flight ..... CONTINUE

Procedure Complete

• WARNING •

Use caution after shutdown if STARTER circuit breaker required pull (failed relay or solenoid). If breaker is unknowingly or unintentionally reset, starter will instantly engage if Battery 1 power is supplied; creating a hazard for ground personnel.

• NOTE •

Starter has been engaged for more than 30 seconds (starter limit is 10 seconds); if not manually engaged, such as during difficult start, this annunciation may indicate a failure of the starter solenoid or a stuck starter button.

Section 3A: Abnormal Procedures

Table of Contents

Introduction 3
Crew Alert System (CAS) Messaging 3
Cautions 3
Advisories 3
Abnormal Procedures Guidance 3
Circuit Breakers 4
Procedure Division Symbols 4
Landing Guidance 5
Land as Soon as Practicable 5
Land as Soon as Possible 5
Abnormal Procedures 6
Brake Failure During Taxi 6
Communications Failure 6
Door Open 7
Fuel Valve Malfunction 7
Inadvertent Icing Encounter 8
Inadvertent IMC Encounter 8
Landing With Failed Brakes 9
Landing With Flat Tire 9
Loss of All Flight Displays 10
Loss of Reliable Airspeed Indication 10
Loss of Reliable Altitude Indication 10
AFCS Alerts 11
Abnormal CAS Procedures 11
ALTERNATOR 1 CURRENT Caution 11
ALTERNATOR 2 CURRENT Caution 12
BATTERY 1 CURRENT Caution 13
BATTERY 1 FAIL Caution 14
BATTERY 1 FAULT Caution 14
BATTERY 1 LOW Caution 15
CHT Caution 16
ECS RECIRC ON Advisory 16
FLAPS AIRSPEED INHIBIT Caution 17
FLAPS CLIMB Advisory 17
FLAPS DISAGREE Caution 18
FLAPS FAIL Caution 18

FLAPS SELECTOR FAIL Caution 19
FUEL IMBALANCE Advisory 19
FUEL IMBALANCE Caution 19
FUEL LOW TOTAL Caution 20
FUEL PUMP OFF Caution 20
FUEL QTY MISCOMPARE Caution 20
FUEL VALVE AUTO FAIL Caution 21
FUEL VALVE OFF Advisory 21
MAIN BUS 1 VOLTS Caution 22
MAIN BUS 2 VOLTS Caution 23
MIXTURE POSITION Caution 23
OIL PRESSURE Caution 24
OIL TEMP Caution 24
PARK BRAKE Caution 24
PITOT HEAT FAIL Caution 25
PROBE HEAT OFF Caution 25
SFD ALT MISCOMPARE Caution 26
SFD IAS MISCOMPARE Caution 27
SFD NO-COMPARE Advisory 27
SFD PITCH MISCOMPARE Caution 28
SFD ROLL MISCOMPARE Caution 29
STARTER ENGAGED Caution 30
TAKEOFF FLAPS Caution 31
Other System Messages 31
MFD FAN FAIL Advisory 31
PFD FAN FAIL Advisory 31

Introduction

This section provides procedures for handling abnormal system and/or flight conditions which, if followed, will maintain an acceptable level of airworthiness or reduce operational risk. The guidelines described in this section are to be used when an abnormal condition exists, and should be considered and applied as necessary.

• WARNING •

If a Warning annunciation is illuminated in combination with any of the following Abnormal annunciations, the Warning annunciation takes precedence and must be performed first.

Crew Alert System (CAS) Messaging

Cautions

Displayed in yellow against a black background, Caution CAS messages arise during situations that require immediate flight crew awareness and subsequent flight crew response.

- A flashing Caution CAS message with an accompanying aural alert requires more timely flight crew response.
- A flashing Caution CAS message with no accompanying aural alert requires flight crew response, dependent on workload.
- A non-flashing Caution CAS message with no accompanying aural alert requires attention, dependent on workload. It may also require performing maintenance or taking corrective action prior to next flight.

Advisories

Displayed in white against a black background, Advisory CAS messages arise during situations that require flight crew awareness and that may require subsequent flight crew response.

Abnormal Procedures Guidance

Although this section provides procedures for handling most abnormal system and/or flight conditions that could arise in the aircraft, it is not a substitute for proper flight training, thorough knowledge of the airplane, and recognized piloting techniques and standards. A thorough study of the information in this handbook while on the ground will help you prepare for time-critical situations in the air.

Sound judgment as well as thorough knowledge of the aircraft, its characteristics, and the flight manual procedures are essential in the handling of any abnormal system and/or flight condition. In addition to the outlined items in the Abnormal Procedures, the following steps are considered part of all abnormal situations:

- Maintain Aircraft Control
- Analyze the Situation
- Take Appropriate Action

Circuit Breakers

Some procedures involve manipulating circuit breakers (CBs). The following criteria should be followed during “Circuit Breaker” steps:

- Intentional pulling of circuit breakers during flight, other than as required in specific procedures, may cause abnormal or unexpected system behavior and is not recommended.
- When instructed to “SET”, the appropriate circuit breaker should be checked for normal condition. If the circuit breaker is not “SET”, it may be reset only once. If the circuit breaker opens again, do not reset.
- When instructed to “PULL”, the appropriate circuit breaker should only be pulled and not reset.
- When instructed to “CYCLE”, the appropriate circuit breaker should be pulled, delayed for several seconds, and reset only once. Allow sufficient cooling time for circuit breakers that are reset through a “CYCLE” procedure.

Procedure Division Symbols

For procedures requiring pilot decision, conditional steps are indented with a symbol to designate sub-sections within the procedure. On condition, the pilot makes a decision to identify the applicable sub-section. Following the initial decision, a further sub-division of the procedure may occur. In that event, one or more additional conditions guides the pilot through the remaining decisions. Once the applicable condition(s) are identified, the pilot follows the remaining steps until the indication "Procedure Complete" is reached.

The procedure symbol levels are:

◆ First Level
  ❍ Second Level
    ❑ Third Level

Landing Guidance

Land as Soon as Practicable

The pilot may consider the convenience of future maintenance when selecting an airport to land as soon as practicable. Pilots must not overfly a suitable and practicable airport for other ground conveniences.

Land as Soon as Possible

The pilot must identify and land at the first available airport that allows for a safe approach and landing considering the approach procedures available, ceilings, visibility, winds and runway lengths

Abnormal Procedures

Brake Failure During Taxi

1. Engine Power ..... AS REQUIRED
2. Directional Control ..... MAINTAIN WITH RUDDER
3. Brake Pedal(s) ..... PUMP

◆ If directional control cannot be maintained:

a. Engine Knob ..... OFF

Procedure Complete

• **NOTE** •

Increasing power may allow some rudder control due to increased ground speed and airflow over the rudder.

Communications Failure

1. Switches and Controls ..... CHECK
2. Frequency ..... CHANGE
3. COM 1 (B12) & COM 2/AUDIO PANL (C12) CB ..... SET
4. Headset ..... CHANGE

Procedure Complete

• **NOTE** •

If, after following the checklist procedure, communication is not restored, proceed with Aeronautical Information Manual (AIM) lost communications procedures.

In the event of an audio panel power failure the audio panel connects COM 1 to the pilot's headset and speaker.

Door Open

◆ If during takeoff roll:

a. Takeoff .....ABORT

Procedure Complete

◆ If in flight:

a. Airplane Control.....MAINTAIN

b. Land as soon as practicable.

Procedure Complete

• NOTE •

The doors on the airplane will remain 1-3 inches open in flight if not latched. Do not allow efforts to close the door interfere with the primary task of maintaining control of the airplane. An open door is impossible to close in flight. Do not attempt to close until after landing.

Fuel Valve Malfunction

◆ If manual fuel selector operation is difficult:

a. FUEL VALVE Circuit Breaker (C3) ..... PULL

b. Fuel Selector .....LEFT OR RIGHT (AS REQ'D)

❍ If difficult operation persists:

(1) Fuel Selector..... LEAVE COVER OPEN FOR MANUAL OPERATION

Procedure Complete

❍ If condition is resolved:

(1) FUEL VALVE Circuit Breaker (C3).....SET

(2) Fuel Selector.....CLOSE COVER FOR AUTOMATIC OPERATION

Procedure Complete

Inadvertent Icing Encounter

1. Probe Heat Switch (if installed) ..... ON
2. Exit icing conditions. Turn back or change altitude.
3. Temperature Selector..... HOT
4. Vent Selector.....DEFROST
5. Airflow Selector ..... MAXIMUM
6. Panel Vents ..... CLOSED
7. Alternate Induction Air..... ON

Procedure Complete

• WARNING •

Flight into known icing conditions is prohibited.

Inadvertent IMC Encounter

1. Airplane Control ..... ESTABLISH STRAIGHT AND LEVEL FLIGHT
2. Autopilot ..... ENGAGE TO HOLD HEADING AND ALTITUDE
3. Heading .....RESET TO INITIATE 180° TURN

Procedure Complete

• NOTE •

Upon entering IMC, a pilot who is not completely proficient in instrument flying should rely upon the autopilot to execute a 180° turn to exit the conditions. Immediate action should be made to turn back as described above.

Landing With Failed Brakes

◆ One brake inoperative:

a. Land on the side of runway corresponding to the inoperative brake.

b. Maintain directional control using rudder and working brake.

Procedure Complete

◆ Both brakes inoperative:

a. Divert to the longest, widest runway with the most direct headwind.

b. Land on downwind side of the runway.

c. Use the rudder for obstacle avoidance.

d. Perform Emergency Engine Shutdown On Ground Checklist.

Procedure Complete

• **NOTE** •

Rudder effectiveness will decrease with decreasing airspeed.

Landing With Flat Tire

◆ Main Gear:

a. Land on the side of the runway corresponding to the good tire.

b. Maintain directional control with the brakes and rudder.

c. Do not taxi. Stop airplane and perform a normal engine Shutdown.

Procedure Complete

◆ Nose Gear:

a. Land in the center of the runway.

b. Hold the nosewheel off the ground as long as possible.

c. Do not taxi. Stop airplane and perform a normal engine Shutdown.

Procedure Complete

• **NOTE** •

If a flat tire or tread separation occurs during takeoff and you cannot abort, land as soon as conditions permit.

Loss of All Flight Displays

1. BAT 1 and BAT 2 Switches ..... VERIFY ON
2. ALT 1 and ALT 2 Switches ..... VERIFY ON
3. Land as soon as possible.

Procedure Complete

Loss of Reliable Airspeed Indication

1. Probe Heat Switch (if installed) ..... ON
2. AP DISC Button ..... PRESS
3. AP CTRL (A3) Circuit Breaker ..... PULL
4. Land as soon as practicable.

Procedure Complete

• **NOTE** •

If only the airspeed indicator is providing erroneous information, and in icing conditions, the most probable cause is Pitot ice. If setting Probe Heat ON does not correct the problem, descend to warmer air. If an approach must be made with a blocked Pitot tube, use known pitch and power settings and the GPS ground speed indicator, taking surface winds into account.

Loss of Reliable Altitude Indication

1. Alternate Static Source ..... OPEN

Procedure Complete

• **NOTE** •

Reference GPS AGL (GAGL) displayed on the PFD.

AFCS Alerts

For more information on AFCS alerts, refer to SR20 Garmin Cockpit Reference Guide.

Abnormal CAS Procedures

ALTERNATOR 1 CURRENT Caution

ALTERNATOR 1 CURRENT

Check Alternator 1 current.

1. ALT 1 (D11) Circuit Breaker .....SET
2. ALT 1 Switch ..... CYCLE

◆ If alternator does not reset:

a. ALT 1 Switch.....OFF

b. Non-Essential Loads .....REDUCE

❍ If flight conditions permit, consider shedding the following to preserve Battery 1:

(1) Air Conditioning.....OFF
(2) Cabin Fan .....OFF
(3) Landing Lights (LAND Switch) .....OFF
(4) CONV SYS 1 (D8) Circuit Breaker ..... PULL
(5) ENGINE SERVOS (C2) Circuit Breaker ..... PULL
(6) CONV SYS 2 (D9) Circuit Breaker ..... PULL
(7) RAD ALT (A14) Circuit Breaker (if installed)..... PULL
(8) EVS CAMERA (C5) Circuit Breaker (if installed) ..... PULL
(9) IRIDIUM DATA (B15) Circuit Breaker (if installed)..... PULL

c. Continue flight, avoiding IMC or night flight as able (reduced power redundancy).

Procedure Complete

• CAUTION •

Dependent on Battery 1 state, landing light may be weak or inoperative for landing.

• NOTE •

Alternator 1 output is low, indicative of alternator failure and will typically be associated with low Main Bus 1 voltage, Battery 1 discharge and MAIN BUS 1 VOLTS Caution message.

ALTERNATOR 2 CURRENT Caution

ALTERNATOR 2 CURRENT

Check Alternator 2 current.

1. ALT 2 (B5) Circuit Breaker..... SET
2. ALT 2 Switch..... CYCLE

◆ If alternator does not reset:

a. ALT 2 Switch .....OFF

b. Continue flight, avoiding IMC or night flight as able (reduced power redundancy).

Procedure Complete

• **NOTE** •

Alternator 2 output is low, indicative of alternator failure. Isolated Alt 2 failure will not typically be associated with any other unusual indications, cautions or warnings (Alt 1 will pick up all loads).

BATTERY 1 CURRENT Caution

BATTERY 1 CURRENT

Check battery 1 current.

1. Main Bus 1, 2 and Non-Essential Bus Loads.....REDUCE
   a. Air Conditioning .....OFF
   b. Cabin Fan.....OFF
   c. Landing Lights (LAND Switch).....OFF
   d. ENGINE SERVOS (C2) Circuit Breaker..... PULL
   e. CONV SYS 1 (D8) Circuit Breaker..... PULL
   f. CONV SYS 2 (D9) Circuit Breaker..... PULL
   g. RAD ALT (A14) Circuit Breaker (if installed) ..... PULL
   h. EVS CAMERA (C5) Circuit Breaker (if installed)..... PULL
   i. IRIDIUM DATA (B15) Circuit Breaker (if installed) ..... PULL
2. Main Bus 1, 2 and Essential Voltages..... MONITOR
3. Land as soon as practicable.

Procedure Complete

• **NOTE** •

Battery 1 discharge while Alt 1 is functioning normally is indicative of an internal power distribution failure within the MCU.

BATTERY 1 FAIL Caution

BATTERY 1 FAIL

Battery 1 service is required.

1. BAT 1 Switch .....OFF
2. Land as soon as practicable.

Procedure Complete

BATTERY 1 FAULT Caution

BATTERY 1 FAULT

Battery 1 fault is detected.

1. BAT 1 Switch .....OFF

◆ If message extinguishes:

   a. BAT 1 Switch .....ON
   b. Continue flight.

◆ If message persists or reoccurs:

   a. BAT 1 switch .....OFF
   b. Exit IMC as soon as practicable.
   c. Land as soon as practicable.

2. Contact Cirrus for corrective action.

Procedure Complete

BATTERY 1 LOW Caution

BATTERY 1 LOW

Battery 1 state of charge is low.

◆ If on ground, prior to engine start:

a. External Power ..... CONNECT

Procedure Complete

◆ If on ground with engine running, or in flight:

a. BAT 1 and ALT 1 Switches ..... VERIFY ON

b. Main Bus 1 Voltage ..... CHECK

c. Service aircraft as soon as practicable.

Procedure Complete

• **NOTE** •

Battery 1 may not have sufficient capacity to start the engine.

CHT Caution

CHT

Cylinder head temperature is high.

◆ If on ground:

a. Power Lever ..... REDUCE

b. Annunciations and Engine Temperatures ..... MONITOR

❍ If message persists:

(1) Power Lever ..... MINIMUM REQUIRED

(2) Do not dispatch.

Procedure Complete

◆ If in flight:

a. Power Lever ..... REDUCE

b. Mixture ..... ADJUST TO TOP OF GREEN ARC

c. Airspeed ..... INCREASE

d. Annunciations and Engine Temperatures ..... MONITOR

❍ If message persists:

(1) Power Lever ..... MINIMUM REQUIRED

(2) Engine Instruments ..... MONITOR

❑ If message persists:

(a) Land as soon as practicable.

Procedure Complete

ECS RECIRC ON Advisory

ECS RECIRC ON

ECS recirculation mode is prohibited in flight.

1. Air Conditioner ..... RECIRC DISABLED

Procedure Complete

FLAPS AIRSPEED INHIBIT Caution

FLAPS AIRSPEED INHIBIT

Flaps motion inhibited.

1. Airspeed .....INCREASE OR REDUCE, AS REQUIRED
   OR
2. Flaps .....RETURN TO PREVIOUS POSITION

Procedure Complete

• **NOTE** •

The flaps will extend or retract to the commanded position as soon as FLAPS AIRSPEED INHIBIT caution extinguishes.

FLAPS CLIMB Advisory

FLAPS CLIMB

Flaps not set for enroute climb.

1. Flaps ..... UP

Procedure Complete

FLAPS DISAGREE Caution

FLAPS DISAGREE

Flaps are not within commanded position.

1. Flaps .....CYCLE TO ACTUAL FLAP POSITION
   - ◆ If message extinguishes:
     a. Flaps .....SELECT DESIRED FLAP POSITION
     b. Continue flight.

     Procedure Complete
   - ◆ If message persists:
     a. Flaps .....MONITOR POSITION
     b. Perform landing in most favorable flap position achievable.

     Procedure Complete

• WARNING •

Flaps motion is inhibited when a flap position disagree condition exists. Setting the flap selector to match actual flap position can potentially extinguish the FLAPS DISAGREE condition and render the flaps operative.

FLAPS FAIL Caution

FLAPS FAIL

Flaps not in commanded position.

1. Flaps .....CYCLE TO ACTUAL FLAP POSITION
   - ◆ If message persists:
     a. Perform landing with flaps at current position.

     Procedure Complete

FLAPS SELECTOR FAIL Caution

FLAPS SELECTOR FAIL

Flaps not in commanded position.

1. Perform landing with flaps at current position.

Procedure Complete

FUEL IMBALANCE Advisory

FUEL IMBALANCE

Fuel quantity imbalance has been detected.

1. Fuel Quantity Gauges ..... CHECK
2. Fuel Selector ..... SELECT FULLER TANK

Procedure Complete

• **NOTE** •

Fuel level imbalance (between left and right) is greater than 5.5 gallons. Leave the fuel selector cover open until tanks are balanced.

FUEL IMBALANCE Caution

FUEL IMBALANCE

Fuel quantity imbalance has been detected.

1. Fuel Quantity Gauges ..... CHECK
2. Fuel Selector ..... SELECT FULLER TANK

Procedure Complete

• **NOTE** •

Fuel level imbalance (between left and right) is greater than 7.5 gallons. Leave the fuel selector cover open until tanks are balanced.

FUEL LOW TOTAL Caution

FUEL LOW TOTAL

Total fuel quantity is low.

1. Fuel Quantity Gauges ..... CHECK
2. Totalized Fuel Quantity ..... CHECK

◆ If totalized value differs significantly from sensed quantity:

a. Initial Fuel Value ..... VERIFY AND CORRECT

◆ If message persists:

a. Land as soon as practicable.

Procedure Complete

• NOTE •

Fuel totalizer or sensed fuel quantity is less than or equal to 10 gallons.

FUEL PUMP OFF Caution

FUEL PUMP OFF

Fuel pump is turned off.

1. Fuel Pump ..... ON (AS REQ'D)

Procedure Complete

FUEL QTY MISCOMPARE Caution

FUEL QTY MISCOMPARE

Sensed and totalized fuel quantity disagreement.

1. Fuel Quantity/Fuel Remaining.....COMPARE

◆If totalized fuel quantity differs significantly from sensed quantity:

a. Initial Fuel Value..... VERIFY AND CORRECT

Procedure Complete

FUEL VALVE AUTO FAIL Caution

FUEL VALVE AUTO FAIL

Automatic fuel tank selection is unavailable.

1. FUEL VALVE (C3) Circuit Breaker..... PULL
2. Fuel Selector..... LEFT OR RIGHT (AS REQ'D)

Procedure Complete

• **NOTE** •

Leave the fuel selector cover open and operate the tank selector manually for duration of flight.

FUEL VALVE OFF Advisory

FUEL VALVE OFF

Fuel valve is in the off position.

1. Fuel Selector..... LEFT OR RIGHT (AS REQ'D)

Procedure Complete

MAIN BUS 1 VOLTS Caution

MAIN BUS 1 VOLTS

Check voltage on Main Bus 1.

1. ALT 1 (D11) Circuit Breaker ..... SET
2. ALT 1 Switch ..... CYCLE

◆ If alternator does not reset:

a. ALT 1 Switch ..... OFF

b. Non-Essential Loads ..... REDUCE

❍ If flight conditions permit, consider shedding the following to preserve Battery 1:

(1) Air Conditioning ..... OFF
(2) Cabin Fan ..... OFF
(3) Landing Lights (LAND Switch) ..... OFF
(4) ENGINE SERVOS (C2) Circuit Breaker ..... PULL
(5) CONV SYS 1 (D8) Circuit Breaker ..... PULL
(6) CONV SYS 2 (D9) Circuit Breaker ..... PULL
(7) RAD ALT (A14) Circuit Breaker (if installed) ..... PULL
(8) EVS CAMERA (C5) Circuit Breaker (if installed) ..... PULL
(9) IRIDIUM DATA (B15) Circuit Breaker (if installed) ..... PULL

c. Continue Flight, avoiding IMC or night flight as able (reduced power redundancy).

Procedure Complete

• CAUTION •

Dependent on Battery 1 state, landing light may be weak or inoperative for landing.

• NOTE •

Main Bus 1 Voltage is low, indicates Alt 1 failure and will typically be associated with low Main Bus 1 voltage and Alt 1 current indications, Battery 1 discharge and ALTERNATOR 1 CURRENT Caution message.

MAIN BUS 2 VOLTS Caution

MAIN BUS 2 VOLTS

Check voltage on Main Bus 2.

1. ALT 2 (B5) Circuit Breaker ..... SET
2. ALT 2 Switch ..... CYCLE

◆ If alternator does not reset:

a. ALT 2 Switch ..... OFF

b. Continue Flight, avoiding IMC or night flight as able (reduced power redundancy).

Procedure Complete

• NOTE •

Main Bus 2 Voltage is low, indicative of dual Alt 1 and 2 failures and will typically be associated with low Main Bus 1 and Main Bus 2 voltages, Alt 1 and Alt 2 current indications, Battery 1 discharge, ALT 1 & 2 and MAIN BUS 1 VOLTS Caution and MAIN BUS 2 VOLTS Caution messages, and ESSENTIAL BUS VOLTS Warning message.

MIXTURE POSITION Caution

MIXTURE POSITION

Check mixture lever position.

1. Mixture ..... AS REQUIRED

◆ If message reoccurs or mixture lever is difficult to move:

a. ENGINE SERVOS (C2) Circuit Breaker ..... PULL

Procedure Complete

• NOTE •

Mixture setting is too low.

OIL PRESSURE Caution

OIL PRESSURE

Oil pressure is out of range.

◆ If in flight:

a. Land as soon as practicable.

Procedure Complete

• NOTE •

Oil pressure between 25 psi and 55 psi at or above 1000 RPM.

OIL TEMP Caution

OIL TEMP

Oil temperature is high.

1. Power..... REDUCE AS MUCH AS PRACTICAL
2. Airspeed..... INCREASE
3. Mixture ..... ADJUST TO TOP OF GREEN ARC
4. Oil Temperature Gauge..... MONITOR

Procedure Complete

• NOTE •

Oil temperature is greater than 240°F (115 °C).

PARK BRAKE Caution

PARK BRAKE

Parking brake is set.

1. Parking Brake..... RELEASE
   a. Stop aircraft and allow the brakes to cool if necessary.

Procedure Complete

PITOT HEAT FAIL Caution

PITOT HEAT FAIL

Pitot heat failure.

1. Probe Heat Switch (if installed) ..... CYCLE OFF, ON

◆ If inadvertent icing encountered, perform Inadvertent Icing Encounter Checklist and:

a. Airspeed ..... EXPECT NO RELIABLE INDICATION
b. Exit icing conditions using attitude, altitude, and power instruments.

Procedure Complete

• **NOTE** •

Pitot heat failure. Displayed when Probe Heat Switch is ON and pitot heat current is not detected.

If using Autopilot, monitor for degraded performance and be aware of possible erroneous overspeed/underspeed protection.

PROBE HEAT OFF Caution

PROBE HEAT OFF

Probe heat is required.

1. Probe Heat Switch (if installed) ..... ON

Procedure Complete

• **NOTE** •

Displayed 15 seconds after system detects OAT is less than 41 °F (5 °C) and probe heat switch is OFF.

SFD ALT MISCOMPARE Caution

SFD ALT MISCOMPARE

SFD altitude miscompare.

1. DISPLAY BACKUP Button.....PRESS

2. Altitude.....CROSS-CHECK SFD WITH PFD
3. Altitude.....CROSS-CHECK PFD ADC 1 WITH ADC 2

• **NOTE** •

Select PFW mode on GTC 1 or GTC 2 and select SENSORS menu or via PFD softkeys to select PFD air data source.

4. Select correct sensor source, if required.
5. Pull erroneous circuit breakers, if required.
   - ADAHRS 1 (B13)
   - ADAHRS 2 (C13)
   - STNDBY ATT A (B14)
   - STNDBY ATT B (C14)
6. Exit IMC as soon as practical.
7. Land as soon as practicable.

Procedure Complete

SFD IAS MISCOMPARE Caution

SFD IAS MISCOMPARE

SFD airspeed miscompare.

1. DISPLAY BACKUP Button ..... PRESS
2. Airspeed ..... CROSS-CHECK SFD WITH PFD
3. Airspeed ..... CROSS-CHECK PFD ADC 1 WITH ADC 2

• **NOTE** •

Select PFW mode on GTC 1 or GTC 2 and select SENSORS menu or PFD softkeys to select PFD air data source.

4. Select correct sensor source, if required.
5. Pull erroneous circuit breakers, if required.
   - ADAHRS 1 (B13)
   - ADAHRS 2 (C13)
   - STNDBY ATT A (B14)
   - STNDBY ATT B (C14)
6. Exit IMC as soon as practical.
7. Land as soon as practicable.

Procedure Complete

SFD NO-COMPARE Advisory

SFD NO-COMPARE

SFD comparison data missing.

1. Exit IMC.
2. Land as soon as practicable.

Procedure Complete

SFD PITCH MISCOMPARE Caution

SFD PITCH MISCOMPARE

SFD pitch miscompare.

1. DISPLAY BACKUP Button.....PRESS
2. Attitude.....CROSS-CHECK SFD WITH PFD
3. Attitude.....CROSS-CHECK PFD AHRS 1 WITH AHRS 2

• **NOTE** •

Select PFW mode on GTC 1 or GTC 2 and select SENSORS menu or PFD softkeys to select PFD attitude source.

4. Select correct sensor source, if required.
5. Pull erroneous circuit breakers, if required.
   - ADAHRS 1 (B13)
   - ADAHRS 2 (C13)
   - STNDBY ATT A (B14)
   - STNDBY ATT B (C14)
6. Exit IMC as soon as practical.
7. Land as soon as practicable.

Procedure Complete

SFD ROLL MISCOMPARE Caution

SFD ROLL MISCOMPARE

SFD roll miscompare.

1. DISPLAY BACKUP Button ..... PRESS
2. Attitude ..... CROSS-CHECK SFD WITH PFD
3. Attitude ..... CROSS-CHECK PFD AHRS 1 WITH AHRS 2

• NOTE •

Select PFW mode on GTC 1 or GTC 2 and select SENSORS menu or PFD softkeys to select PFD attitude source.

4. Select correct sensor source, if required.
5. Pull erroneous circuit breakers, if required.
   - ADAHRS 1 (B13)
   - ADAHRS 2 (C13)
   - STNDBY ATT A (B14)
   - STNDBY ATT B (C14)
6. Exit IMC as soon as practical.
7. Land as soon as practicable.

Procedure Complete

STARTER ENGAGED Caution

STARTER ENGAGED

Starter is engaged.

◆ If on ground:

a. Starter Button ..... RELEASE

❍ If starter does not disengage (stuck button, relay, or solenoid failure):

(1) Wait 20 seconds before next start attempt.
(2) BAT 1 Switch ..... OFF
(3) Mixture ..... CUTOFF
(4) Fuel Pump ..... OFF
(5) STARTER (D1) Circuit Breaker ..... PULL

Procedure Complete

◆ If in flight:

a. STARTER (D1) Circuit Breaker ..... PULL
b. Flight ..... CONTINUE

Procedure Complete

• WARNING •

Use caution after shutdown if STARTER circuit breaker required pull (failed relay or solenoid). If breaker is unknowingly or unintentionally reset, starter will instantly engage if Battery 1 power is supplied; creating a hazard for ground personnel.

• NOTE •

Starter has been engaged for more than 15 seconds (starter limit is 10 seconds); if not manually engaged, such as during difficult start, this annunciation may indicate a failure of the starter solenoid or a stuck starter button.

TAKEOFF FLAPS Caution

TAKEOFF FLAPS

Flaps not in takeoff configuration.

1. Takeoff.....ABORT
2. Flaps 50%

Procedure Complete

Other System Messages

MFD FAN FAIL Advisory

MFD FAN FAIL

MFD cooling fan failure.

1. AVIONICS FAN 1 (D7) Circuit Breaker .....SET

◆ If annunciation does not extinguish:

a. High cabin temps..... LAND AS SOON AS PRACTICABLE
b. Low cabin temps .....CONTINUE, MONITOR

Procedure Complete

PFD FAN FAIL Advisory

PFD FAN FAIL

PFD cooling fan failure.

1. AVIONICS FAN 2 (C7) Circuit Breaker.....SET

◆ If annunciation does not extinguish:

a. High cabin temps..... LAND AS SOON AS PRACTICABLE
b. Low cabin temps .....CONTINUE, MONITOR

Procedure Complete

Intentionally Left Blank

Section 4: Normal Procedures

Table of Contents

Introduction 3
Airspeeds for Normal Operation 3
Normal Procedures 4
  Preflight Inspection 4
  Before Engine Start 9
  Engine Start 10
  Before Taxi 12
  Before Takeoff 13
  Maximum Power Fuel Flow 15
  Takeoff 15
  Normal Takeoff 16
  Short Field Takeoff 16
  Climb 17
  Cruise 18
  Cruise Leaning 19
  Descent 20
  Before Landing 20
  Landing 20
    Normal Landing 20
    Short Field Landing 21
    Crosswind Landing 21
  Balked Landing/Go-Around 21
  After Landing 22
  Shutdown 22
Stalls 23
Environmental Conditions 24
  Cold Weather Operation 24
    Starting 24
  Hot Weather Operation 26
    Ground Operation of Air Conditioning System (Optional) 26
  Extended Ground Operation 26
Noise Characteristics/Abatement 27

Intentionally Left Blank

Introduction

This section provides amplified procedures for normal operation of the Cirrus SR20 aircraft.

• **NOTE** •

Refer to Section 9: Log of Supplements for optional equipment Normal Procedures.

Normal operating procedures for the Garmin TAWS and GFC 700 Automatic Flight Control System are described in the Cirrus Perspective+ Integrated Flight Deck Pilot's Guide.

Airspeeds for Normal Operation

Unless otherwise noted, the following speeds are based on a maximum weight of 3150 lb. and may be used for any lesser weight. However, to achieve the performance specified in Section 5 for takeoff and landing distance, the speed appropriate to the particular weight must be used.

Takeoff:

- Normal, Flaps 50% ..... 71-75 KIAS
- Short Field, Flaps 50% ..... 71 KIAS
- Obstacle Clearance, Flaps 50% ..... 81 KIAS

Enroute Climb, Flaps Up:

- Normal, SL ..... 96 KIAS
- Normal, 10,000' ..... 92 KIAS
- Best Rate of Climb, SL ..... 96 KIAS
- Best Rate of Climb, 10,000' ..... 92 KIAS

Landing Approach:

- Normal Approach, Flaps Up ..... 89 KIAS
- Normal Approach, Flaps 50% ..... 84 KIAS
- Normal Approach, Flaps 100% ..... 78 KIAS
- Short Field, Flaps 100% ..... 78 KIAS

Go-Around, Flaps 50%:

- Best Angle of Climb, SL ..... 81 KIAS

Maximum Recommended Turbulent Air Penetration:

- 3150 Lb ..... 133 KIAS
- 2700 Lb ..... 123 KIAS
- 2300 Lb ..... 114 KIAS

Maximum Demonstrated Crosswind Velocity:

- Takeoff or Landing ..... 20 Knots

Normal Procedures

Preflight Inspection

• WARNING •

Before carrying out preflight inspections, ensure that all required maintenance has been accomplished. Review your flight plan and compute weight and balance and performance requirements. Throughout the walk-around: check all hinges, hinge pins, and bolts for security; check skin for damage, condition, and evidence of delamination; check all control surfaces for proper movement and excessive free play; check area around liquid reservoirs and lines for evidence of leaking.

In cold weather, remove all frost (polished or not), ice, snow, or slush from fuselage, wing, stabilizers, and control surfaces. Ensure that control surfaces are free of internal ice or debris. Check that wheel fairings are free of snow and ice accumulation.

Failure to comply may result in significant aircraft damage, loss of aircraft, and/or loss of life.

• CAUTION •

For serials without a probe heat switch: probe heat will be automatically activated for 10 seconds when BAT 1 is turned on. Repeated cycling of the BAT 1 switch will result in the pitot probe becoming very hot.

Figure 4-1: Recommended Walk-Around Sequence

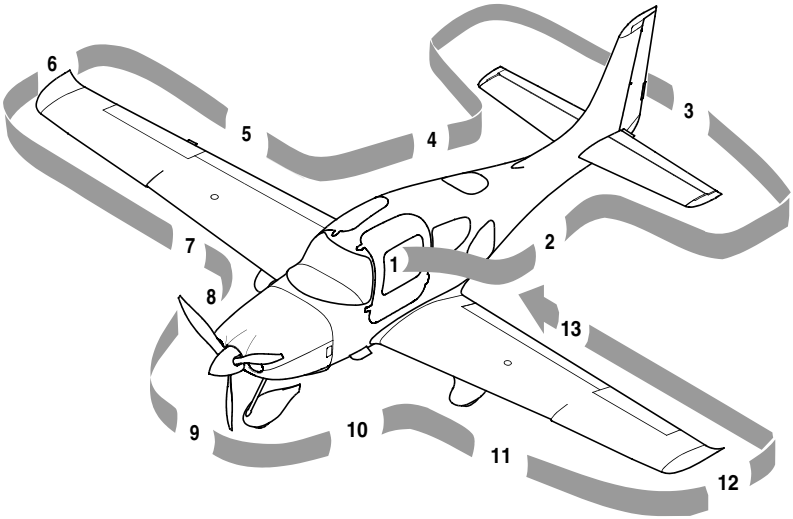

1. Cabin
   a. Required Documents ..... CHECK
   b. BAT 2 Switch ..... ON
      (1) Verify PFD, GTC 1, and GTC 2 power on.
      (2) Verify MFD does not power on.
   c. Essential Bus Voltage ..... 23-25 VOLTS
   d. BAT 1 Switch ..... ON
      (1) Verify MFD powers on.
   e. Avionics Cooling Fan ..... AUDIBLE
   f. Fuel Quantity ..... CHECK
   g. Flaps 100%
   h. Lights ..... CHECK OPERATION
   i. Stall Warning System Inlet ..... UNOBSTRUCTED
   j. Stall Warning ..... TEST
      (1) Test stall warning system by applying suction to the stall warning system inlet and noting the warning horn sounds.
   k. BAT 1 and BAT 2 Switches ..... OFF
   l. Alternate Static Source ..... NORMAL
   m. Circuit Breakers ..... IN
   n. Fire Extinguisher ..... CHARGED AND AVAILABLE
   o. Emergency Egress Hammer ..... STOWED
   p. STARTER DISABLE Switch ..... ENABLE
2. Left Fuselage
   a. Antennae ..... CONDITION AND ATTACHMENT
   b. Wing/Fuselage Fairing ..... CHECK
   c. Baggage Door ..... CLOSED AND SECURE
   d. Static Port ..... CONDITION, CLEAR
   e. Parachute Cover ..... SEALED AND SECURE

(Continued on next page)

(Continued)

3. Empennage
   a. Tiedown Rope .....REMOVE
   b. Horizontal and Vertical Stabilizers .....CONDITION

• **NOTE** •

Verify tape covering the forward and aft inspection holes located on outboard ends of horizontal stabilizer is installed and securely attached.

   c. Elevator.....CONDITION, MOTION
   d. Elevator Trim Tab.....CONDITION AND SECURITY
   e. Elevator Static Wicks.....CONDITION AND SECURITY
   f. Rudder .....CONDITION, MOTION
   g. Rudder Trim Tab .....CONDITION AND SECURITY
   h. Rudder Static Wicks .....CONDITION AND SECURITY
   i. Attachment hinges, bolts, and cotter pins.....SECURE
4. Right Fuselage
   a. Static Port..... CONDITION, CLEAR
   b. Wing/Fuselage Fairings..... CHECK
5. Right Wing Trailing Edge
   a. Flap and Rub Strips.....CONDITION AND SECURITY
   b. Aileron ..... CONDITION, CLEAR
   c. Aileron Trim Tab.....CONDITION AND SECURITY
   d. Aileron Static Wicks.....CONDITION AND SECURITY

• **NOTE** •

Verify bolt located under the inboard edge of aileron is secured with safety wire.

   e. Aileron Gap Seal .....CONDITION AND SECURITY
   f. Hinges, actuation arm, bolts, and cotter pins .....SECURE

(Continued on next page)

(Continued)

6. Right Wing Tip
   a. Tip.....ATTACHMENT
   b. Wing Tip Light and Lens.....CONDITION AND SECURITY
   c. Wing Tip Static Wicks.....CONDITION AND SECURITY
   d. Fuel Vent (underside)..... CLEAR
7. Right Forward Wing and Main Gear
   a. Stall Warning Port..... CLEAR
   b. Leading Edge and Stall Strips.....CONDITION
   c. Fuel Cap.....CHECK FUEL LEVEL AND SECURE
   d. Fuel Drains (2 underside).....SAMPLE
   e. Wheel Fairings.....SECURITY, ACCUMULATION OF DEBRIS
   f. Tire.....CONDITION
   g. Wheel and Brakes..... FLUID LEAKS, EVIDENCE OF OVERHEATING, GENERAL CONDITION, AND SECURITY
   h. Chocks and Tiedown Ropes.....REMOVE
8. Nose, Right Side

• CAUTION •

The engine must not be operated with less than six quarts of oil in the sump (dipstick indication). Seven quarts is recommended for extended flights.

   a. Engine Oil.....CHECK 6-7 QUARTS, LEAKS
   b. Engine Oil Dipstick/Filler Cap & Door.....SECURE
   c. Ice Inspection Light.....CONDITION AND SECURITY
   d. Cowling.....ATTACHMENTS SECURE
   e. Exhaust Pipe.....CONDITION, SECURITY, AND CLEARANCE

(Continued on next page)

(Continued)

9. Nose Gear, Propeller, and Spinner

• WARNING •

Keep clear of propeller rotation plane. Do not allow others to approach propeller.

   a. Tow Bar ..... REMOVE AND STOW
   b. Strut ..... CONDITION
   c. Wheel Fairing ..... SECURITY, ACCUMULATION OF DEBRIS
   d. Wheel and Tire ..... CONDITION, INFLATION, AND WEAR
   e. Propeller ..... CONDITION (INDENTATIONS, NICKS, ETC.)
   f. Spinner ..... CONDITION, SECURITY, AND OIL LEAKS
   g. Air Inlets ..... UNOBSTRUCTED

10. Nose, Left Side
   a. Ice Inspection Light ..... CONDITION AND SECURITY
   b. Cowling ..... ATTACHMENTS SECURE
   c. External Power ..... DOOR SECURE
   d. Gascolator (underside) ..... DRAIN FOR 3 SECONDS, SAMPLE

11. Left Main Gear and Forward Wing
   a. Wheel Fairings ..... SECURITY, ACCUMULATION OF DEBRIS
   b. Tire ..... CONDITION
   c. Wheel and Brakes ..... FLUID LEAKS, EVIDENCE OF OVERHEATING, GENERAL CONDITION, AND SECURITY
   d. Chocks and Tiedown Ropes ..... REMOVE
   e. Fuel Drains (2 underside) ..... SAMPLE
   f. Fuel Cap ..... CHECK FUEL LEVEL AND SECURE
   g. Leading Edge and Stall Strips ..... CONDITION

12. Left Wing Tip
   a. Fuel Vent (underside) ..... CLEAR
   b. Pitot Probe ..... CLEAR
   c. Wing Tip Light and Lens ..... CONDITION AND SECURITY
   d. Tip ..... ATTACHMENT

(Continued on next page)

(Continued)

e. Wing Tip Static Wicks ..... CONDITION AND SECURITY

13. Left Wing Trailing Edge

• NOTE •

Verify bolt located under the inboard edge of aileron is secured with safety wire.

a. Hinges, actuation arm, bolts, and cotter pins ..... SECURE

b. Aileron Gap Seal ..... SECURITY

c. Aileron Static Wicks ..... CONDITION AND SECURITY

d. Aileron ..... CONDITION, MOTION

e. Flap and Rub Strips ..... CONDITION AND SECURITY

Before Engine Start

1. Preflight Inspection ..... COMPLETE
2. Passengers ..... BRIEFED

• NOTE •

Ensure all the passengers have been fully briefed on smoking, the use of the seat belts, doors, emergency exits, egress hammer, Safe Return Autoland, and CAPS.

3. Seats and Seat Belts ..... ADJUST AND SECURE

• WARNING •

Crew seats must be locked in position and control handles fully down before flight. Ensure seat belt harnesses are not twisted.

4. Parking Brake ..... AS REQUIRED
5. BAT 1 and BAT 2 Switches ..... ON
6. External Power (If required) ..... CONNECT

Engine Start

If the engine is warm, no priming is required. For the first start of the day and in cold conditions, prime will be necessary.

Weak intermittent firing followed by puffs of black smoke from the exhaust stack indicates over-priming or flooding. Excess fuel can be cleared from the combustion chambers by the following procedure:

- Turn fuel pump off.
- Allow fuel to drain from intake tubes.
- Set the mixture control to CUTOFF and the power lever to 1/2 open position.
- Crank the engine through several revolutions with the starter.
- When the engine starts, release starter, smoothly advance the mixture control to RICH, and promptly retard the power lever.

If the engine is under-primed, especially with a cold soaked engine, it will not fire, and additional priming will be necessary. As soon as the cylinders begin to fire, open the power lever slightly to keep it running. Refer to Cold Weather Operation in this section or additional information regarding cold weather operations.

• WARNING •

If airplane will be started using external power, keep all personnel and power unit cables well clear of the propeller rotation plane.

(Continued on next page)

(Continued)

1. ALT 1 and ALT 2 Switches ..... OFF
2. CAS Messages ..... CHECK
3. Strobe Lights (STRB Switch) ..... ON
4. Power Lever ..... OPEN ¼ INCH
5. Mixture ..... CUTOFF
6. Propeller Area ..... CLEAR
7. Brakes ..... HOLD
8. Fuel Pump ..... ON
9. Mixture ... ADVANCE TO RICH TO PRIME ENGINE AS REQUIRED

• NOTE •

For starts with cold engine, mixture can remain in RICH position for a longer duration before moving to CUTOFF to ensure adequate priming.

10. Mixture ..... CUTOFF
11. Engine Knob ..... BOTH
12. Starter ..... ENGAGE

• CAUTION •

Limit cranking to intervals of 10 seconds with a 30-second cooling period between cranks. This will improve battery and contactor life.

13. Mixture ..... SMOOTHLY ADVANCE TO RICH (AFTER ENGINE STARTS)
14. Power Lever ..... RETARD (MAINTAIN 1000 RPM)
15. Oil Pressure ..... RISES WITHIN 30 SECONDS OF START

• NOTE •

In cold weather, oil pressure may be slow to rise; shut down if no indication within 60 seconds after start.

16. Fuel Pump ..... OFF
17. ALT 1 and ALT 2 Switches ..... ON
18. Engine Parameters ..... MONITOR
19. Avionics Initialization ..... ALL INITS COMPLETE
20. CAPS Pin ..... REMOVE AND STOW
21. External Power (If applicable) ..... DISCONNECT

Before Taxi

When taxiing, directional control is accomplished with rudder deflection and intermittent braking (toe taps) as necessary. Proper braking practices are critical to avoid potential damage to the brakes. Pilots unaccustomed to free castering nose wheel steering may be inclined to “ride” the brakes to maintain constant taxi speeds and use the brakes excessively for steering. Use only as much power as is necessary to achieve forward movement. Deceleration or taxi speed control using brakes but without a reduction in power will result in increased brake temperature. Taxi over loose gravel at low engine speed to avoid damage to the propeller tips.

1. Flaps ..... UP
2. COM and NAV/GPS ..... SET
3. ATIS/Clearance ..... OBTAIN
4. Altimeter ..... SET
5. Transponder ..... SET
6. Heading/Initial ALT ..... SET
7. Flight Controls ..... FREE AND CORRECT
8. Lights ..... AS REQUIRED
9. Cabin Heat/Defrost ..... AS REQUIRED
10. Fuel Selector ..... SWITCH TANK
11. Autopilot ..... ENGAGE (PRESS AP BUTTON)
12. AP DISC Button ..... PRESS
13. Trim ..... SET
14. Parking Brake ..... RELEASE
15. Brakes ..... CHECK

Before Takeoff

During cold weather operations, the engine should be properly warmed up before takeoff. In most cases this is accomplished when the oil temperature has reached at least 100 °F (38 °C). In warm or hot weather, precautions should be taken to avoid overheating during prolonged ground engine operation. Additionally, long periods of idling may cause fouled spark plugs.

• WARNING •

Do not takeoff with frost, ice, snow, or other contamination on the fuselage, wing, stabilizers, and control surfaces.

Allow a cooling period following a high-energy braking event. High-energy braking can include an aborted takeoff or the equivalent energy required for a Maximum Gross Weight full-stop from 70 knots in less than 1000 feet.

1. Doors ..... LATCHED
2. Center Console Switch Panel ..... SET
3. Air Conditioner ..... RECIRC DISABLED

• NOTE •

If Air Conditioner is ON for takeoff roll, see Section 5, Takeoff Weight 3150 lb (1429 kg) for takeoff distance adjustment. No takeoff distance adjustment is necessary if system remains OFF for takeoff.

4. Fuel Quantity ..... CONFIRM
5. Fuel Selector..... FULLER TANK, CLOSE COVER FOR AUTOMATIC OPERATION
6. Fuel Pump ..... ON
7. Mixture ..... FULL RICH
8. Flaps ..... SET 50% AND CHECK
9. Brakes ..... HOLD
10. Power Lever ..... 2200 RPM

(Continued on next page)

(Continued)

11. Alternator ..... CHECK
    a. Probe Heat Switch (if installed) ..... ON
    b. Landing Light (LAND Switch) ..... ON
12. Voltage ..... CHECK
13. Probe Heat Switch (if installed) ..... AS REQUIRED

• **NOTE** •

Probe Heat should be ON for flight into IMC, flight into visible moisture, or whenever ambient temperatures are 41 °F (5 °C) or less.

14. Landing Light (LAND Switch) ..... AS REQUIRED
15. Magnetos ..... CHECK LEFT AND RIGHT
    a. Engine Knob ..... R, NOTE RPM, THEN BOTH
    b. Engine Knob ..... L, NOTE RPM, THEN BOTH

• **NOTE** •

RPM drop must not exceed 175 RPM for either magneto. RPM differential must not exceed 50 RPM between magnetos. If there is a doubt concerning operation of the ignition system, RPM checks at higher engine speeds will usually confirm whether a deficiency exists.

An absence of RPM drop may indicate faulty grounding of one side of the ignition system or magneto timing set in advance of the specified setting.

16. Engine Parameters ..... CHECK
17. Power Lever ..... IDLE

• **NOTE** •

Verify smooth engine operation at idle speed of 700 to 750 RPM.

18. Power Lever ..... 1000 RPM
19. Trim ..... SET TAKEOFF
20. CAS Messages ..... CHECK

Maximum Power Fuel Flow

Target fuel flow is indicated by the top of a dynamically calculated green arc displayed on the fuel flow gauge. Full Power target fuel flow should be maintained at the top of this arc by use of the mixture lever.

The fuel flow values in the table below were demonstrated to obtain the takeoff and climb performance presented in Section 5 at ISA standard conditions.

Altitude	Target Fuel Flow GPH
0	20
4000	18
8000	16
12000	15
16000	13

• CAUTION •

Excessively rich mixture will occur if the mixture control is set to FULL RICH above 5000 feet density altitude

Takeoff

• NOTE •

Ensure mixture is appropriate for field density altitude.

Fuel flow at full throttle should be at the top of the green arc on the fuel flow gauge.

Power Check: Check full-throttle engine operation early in takeoff run. The engine should run smoothly and turn approximately 2700 RPM. Verify all engine parameters are not in caution or warning ranges. Discontinue takeoff at any sign of rough operation or sluggish acceleration. Make a thorough full-throttle static run-up before attempting another takeoff.

For takeoff over a gravel surface, advance Power Lever slowly. This allows the airplane to start rolling before high RPM is developed, and gravel will be blown behind the propeller rather than pulled into it.

Flap Settings: All takeoffs are accomplished with flaps set at 50%.

Takeoff Techniques: Soft or rough field takeoffs are performed by lifting the airplane off the ground as soon as practical in a tail-low attitude. If no obstacles are ahead, the airplane should be leveled off immediately to accelerate to a higher climb speed.

Maximum demonstrated crosswind is 20 knots. With the ailerons fully deflected into the wind, accelerate the airplane to a speed slightly higher than normal while decreasing the aileron deflection as speed increases then - with authority - rotate to prevent possibly settling back to the runway while drifting. When clear of the ground, make a coordinated turn into the wind to correct for drift.

• **NOTE** •

Fuel Pump should be left ON during takeoff and for climb as required for vapor suppression with hot or warm fuel.

Normal Takeoff

1. Brakes..... RELEASE (STEER WITH RUDDER ONLY)
2. Power Lever.....FULL FORWARD

• **NOTE** •

Abrupt full range throttle movement may result in a slight engine hesitation or stumble before best power is attained. Idle to maximum power throttle movements should be made slowly (approximately 3 seconds for full range motion).

3. Mixture ..... SET TO TOP OF GREEN ARC
4. Engine Parameters ..... CHECK WITHIN GREEN ARCS
5. Elevator Control.....ROTATE SMOOTHLY AT 71-75 KIAS
6. Flaps .....UP AT 85 KIAS, CLEAR OF OBSTACLES

Short Field Takeoff

1. Brakes..... HOLD
2. Power Lever.....FULL FORWARD
3. Mixture ..... SET TO TOP OF GREEN ARC
4. Engine Parameters ..... CHECK WITHIN GREEN ARCS
5. Brakes..... RELEASE (STEER WITH RUDDER ONLY)
6. Elevator Control..... ROTATE SMOOTHLY AT 71 KIAS
7. Flaps .....UP AT 85 KIAS, CLEAR OF OBSTACLES

Climb

Normal climbs are performed flaps UP (0%) and full power at speeds 5 to 10 knots higher than best rate-of-climb speeds. These higher speeds give the best combination of performance, visibility and engine cooling.

For maximum rate of climb, use the best rate-of-climb speeds shown in the rate-of-climb chart in Section 5. If an obstruction dictates the use of a steep climb angle, the best angle-of-climb speed should be used. Climbs at speeds lower than the best rate-of-climb speed should be of short duration to avoid engine-cooling problems.

1. Climb Power ..... SET
2. Flaps ..... VERIFY UP
3. Mixture ..... LEAN AS REQUIRED FOR ALTITUDE
4. Engine Parameters ..... MONITOR
5. Fuel Pump ..... AS REQUIRED

• CAUTION •

Fuel Pump should be left ON during takeoff and for climb as required for vapor suppression with hot or warm fuel.

Fuel flow at full throttle should be at the top of the green arc on the fuel flow gauge.

Cruise

Normal cruising is performed between 55% and 85% power. The engine power setting and corresponding fuel consumption for various altitudes and temperatures can be determined by using the cruise data in Section 5.

The selection of cruise altitude is made based on the most favorable wind conditions and the desired power settings. These significant factors should be considered on every trip to reduce fuel consumption.

• **NOTE** •

Avoid engine operation with low manifold pressure and high engine RPM. Manifold pressures less than 15 in.Hg with high engine RPM should be avoided when possible to do so. When possible avoid rapid changes in the throttle setting. These conditions can cause damage to the counterweights, rollers or bushings, and cause detuning.

Do not do closed throttle descents which can cause ring flutter and damage to the cylinders and piston rings.

1. Fuel Pump ..... AS REQUIRED

• **NOTE** •

The Fuel Pump may be used for vapor suppression during cruise.

The Fuel Pump should be set to ON during maneuvering flight (flight training maneuvers, chandelles, stalls, etc.).

2. Cruise Power ..... SET
3. Mixture ..... LEAN AS REQUIRED
4. Engine Parameters ..... MONITOR
5. Fuel Quantity and Balance ..... MONITOR

Cruise Leaning

• CAUTION •

If moving the mixture control from the full rich position only decreases the EGT from the full rich value, place the mixture control back in the full forward position and have the fuel system serviced.

Exhaust gas temperature (EGT) may be used as an aid for mixture leaning in cruise flight.

• NOTE •

Engine can be leaned for Best Power Cruise at any power setting. For Best Economy use 75% power or less. For best durability, use 85% or less at best power.

To adjust the mixture, lean to establish the peak EGT as a reference point and then adjust the mixture by the desired increment based on the following table:

Mixture Description	Exhaust Gas Temperature
Best Power	100 °F Rich Of Peak EGT
Best Economy	Between Peak EGT and 50 °F Lean Of Peak EGT, depending on ambient conditions (ensuring no misfire)

Alternatively, leaning can be done by adjusting the mixture to the cyan Target Fuel Flow caret displayed on the fuel flow gauge.

Target Fuel Flow is determined using a calculated engine air flow based on engine speed, manifold air temperature and manifold air pressure.

Target Fuel Flow is advisory only and does not guarantee sufficient cylinder cooling. If any CHT's are greater than 435 °F enrich the mixture to aid in cooling. Under some conditions, engine roughness may occur while operating at best economy. If this occurs, enrich mixture as required to smooth engine operation. Any change in altitude or Power Lever position will require a recheck of EGT indication.

Descent

1. Altimeter ..... SET
2. Landing Lights (LAND Switch) ..... ON
3. Fuel Quantity ..... CHECK
4. Power Lever ..... AS REQUIRED
5. Mixture ..... AS REQUIRED
6. Seats and Seat Belts ..... SECURE
7. Brake Pressure ..... CHECK

Before Landing

1. Fuel Pump ..... ON
2. Mixture ..... AS REQUIRED

• CAUTION •

The mixture should be set such that fuel flow is at the top of the green arc on the fuel flow gauge when the throttle is advanced to wide open. This mixture position is approximately equivalent to the cyan target when at reduced power settings

3. Flaps ..... AS REQUIRED
4. Autopilot ..... AS REQUIRED

Landing

• CAUTION •

Landings should be made with full flaps. Landings with less than full flaps are recommended only if the flaps fail to deploy or to extend the aircraft's glide distance due to engine malfunction. Landings with flaps at 50% or 0% power should be used to achieve a normal glide path and low descent rate. Flare should be minimized.

Normal Landing

1. Flaps 100%
2. Airspeed ..... 81-83 KIAS
3. Power Lever ..... AS REQUIRED

   After touchdown:

4. Brakes ..... AS REQUIRED

Short Field Landing

1. Flaps 100%
2. Airspeed ..... 78 KIAS
3. Power Lever ..... AS REQUIRED

   After clear of obstacles:

4. Power Lever ..... REDUCE TO IDLE

   After touchdown:

5. Brakes .....MAXIMUM PILOT EFFORT W/O SKIDDING

Crosswind Landing

Normal crosswind landings are made with full flaps. Avoid prolonged slips. After touchdown, hold a straight course with rudder and brakes as required.

The maximum allowable crosswind velocity is dependent upon pilot capability as well as aircraft limitations. Operation in direct crosswinds of 20 knots has been demonstrated.

Balked Landing/Go-Around

In a balked landing (go-around) climb, apply full power, then reduce the flap setting to 50%. If obstacles must be cleared during the go-around, climb at the best angle of climb with 50% flaps. After clearing any obstacles, retract the flaps and accelerate to the normal flaps-up climb speed.

• WARNING •

Abrupt full range power lever movement can result in engine damage. Idle to maximum power movements of the power lever should be made slowly (approximately 3 seconds for full range motion). Abrupt full range power lever movements can also accentuate overly rich mixture settings resulting in poor throttle response.

1. Power Lever ..... FULL FORWARD
2. TO/GA Button ..... PRESS
3. Flaps 50%
4. Airspeed ..... 81 KIAS

   After clear of obstacles:

5. Flaps ..... UP

After Landing

1. Fuel Pump ..... OFF
2. Mixture ..... LEAN TO OBTAIN MAXIMUM IDLE RPM
3. Flaps ..... UP
4. Lights ..... AS REQUIRED
5. Probe Heat Switch (if installed) ..... OFF

• NOTE •

As the airplane slows, the rudder becomes less effective and taxiing is accomplished using differential braking.

Shutdown

1. Fuel Pump ..... OFF
2. Power Lever ..... IDLE
3. Engine Knob ..... CYCLE

• CAUTION •

Verify engine hesitates as the switch cycles through the "OFF" position. If the engine does not hesitate, one or both magnetos are not grounded. Prominently mark the propeller as being "Hot," and contact maintenance personnel immediately.

4. Mixture ..... CUTOFF
5. All Switches ..... OFF
6. Engine Knob ..... OFF
7. ELT ..... TRANSMIT LIGHT OUT

• NOTE •

After a hard landing, ELT may activate. if this is suspected, press the RESET button.

8. CAPS Pin ..... REPLACE
9. Chocks, Tie-downs, Pitot Covers ..... AS REQUIRED

Stalls

Aircraft stall characteristics are conventional. Power-off stalls may be accompanied by a slight nose bobbing if full aft stick is held. Power-on stalls are marked by a high sink rate at full aft stick. Power-off stall speeds at maximum weight for both forward and aft CG positions are presented in Section 5 - Stall Speeds.

When practicing stalls at altitude, as the airspeed is slowly reduced, you will notice a slight airframe buffet, hear the stall warning horn sound, and the "stall, stall, stall" aural alert between 5 and 10 knots before the stall, feel a stick shaker vibration in the side stick, and see the Crew Alerting System display a STALL Warning annunciation. Normally, the stall is marked by a gentle nose drop and the wings can easily be held level or in the bank with coordinated use of the ailerons and rudder. Upon stall warning in flight, recovery is accomplished by immediately reducing back pressure to reduce the angle of attack and to maintain safe airspeed, adding power as required and rolling wings level with coordinated use of the controls.

• WARNING •

Use care to avoid uncoordinated, abrupt or abused control inputs when close to stall.

Abrupt full range power lever movement can result in engine damage. Idle to maximum power movements of the power lever should be made slowly (approximately 3 seconds for full range motion). Abrupt full range power lever movements can also accentuate overly rich mixture settings resulting in poor throttle response.

• NOTE •

If Stall Warning is inoperative, Autopilot Underspeed Protection will not be provided in Altitude Critical Modes (ALT, GS, GP, TO and GA), and Low Speed ESP will not be available.

Environmental Conditions

Cold Weather Operation

• CAUTION •

An engine that has been superficially warmed, may start and appear to run satisfactorily, but can be damaged from lack of lubrication due to the congealed oil blocking proper oil flow through the engine. The amount of damage will vary and may not become evident for many hours. However, the engine may be severely damaged and may fail shortly following application of high power. Proper procedures require thorough application of preheat to all parts of the engine. Hot air must be applied directly to the oil sump and external oil lines as well as the cylinders, air intake and oil cooler. Because excessively hot air can damage non-metallic components such as composite parts, seals, hoses, and drive belts, do not attempt to hasten the preheat process.

Starting

When the engine has been exposed to temperatures below 10 °F (-12 °C) for a period of two hours or more, the use of an external pre-heater and external power is recommended. Failure to properly preheat a cold-soaked engine may result in oil congealing within the engine, oil hoses, and oil cooler with subsequent loss of oil flow, possible internal damage to the engine, and subsequent engine failure.

If the engine does not start during the first few attempts, or if engine firing diminishes in strength, the spark plugs have probably frosted over. Preheat must be used before another start is attempted.

• NOTE •

When the oil temperature has reached 100 °F (38 °C) and oil pressure does not exceed 70 psi at 2500 RPM, the engine has been warmed sufficiently to accept full rated power.

1. External Power (If applicable) ..... CONNECT
2. Brakes ..... HOLD
3. BAT 1 and BAT 2 Switches ..... ON (CHECK VOLTS)
4. Strobe Lights (STRB Switch) ..... ON

(Continued on next page)

(Continued)

5. Power Lever ..... OPEN ¼ INCH
6. Mixture ..... CUTOFF
7. Propeller Area ..... CLEAR
8. Fuel Pump ..... ON
9. Mixture ... ADVANCE TO RICH TO PRIME ENGINE AS REQUIRED

• *NOTE* •

For starts with cold engine, mixture can remain in RICH position for a longer duration before moving to CUTOFF to ensure adequate priming.

10. Mixture ..... CUTOFF
11. Engine Knob ..... BOTH

• CAUTION •

Limit cranking to intervals of 10 seconds with a 30-second cooling period between cranks. This will improve battery and contactor life.

12. Starter ..... ENGAGE
13. Mixture ..... SMOOTHLY ADVANCE TO RICH (AFTER ENGINE STARTS)
14. Oil Pressure ..... CHECK
15. Power Lever ..... RETARD (MAINTAIN 1000 RPM)
16. Fuel Pump ..... OFF
17. ALT 1 and ALT 2 Switches ..... ON
18. Engine Parameters ..... MONITOR
19. External Power (If applicable) ..... DISCONNECT
20. Strobe Lights (STRB Switch) ..... ON

Hot Weather Operation

Avoid prolonged engine operation on the ground. Fuel Pump must be ON for engine start and takeoff, and should be ON during climb for vapor suppression which could occur under hot ambient conditions or after extended idle.

Ground Operation of Air Conditioning System (Optional)

• NOTE •

To facilitate faster cabin cooling, prior to engine start leave the cabin doors open for a short time to allow hot air to escape cabin.

1. Control Panel..... SELECT DESIRED MODE AND TEMPERATURE
2. Voltage.....MONITOR

• NOTE •

Decrease electrical load if battery discharge is noted.

3. Annunciator Lights.....CHECK
   a) Verify ALTERNATOR 1 CURRENT caution light out and positive amps indication.
4. Engine Parameters .....CHECK

Extended Ground Operation

For airplanes that experience prolonged engine operation on the ground, the following procedure is recommended to reduce potential for spark plug lead fouling and lead build-up on engine valve guides.

1. Set throttle to 1200 RPM.
2. Lean the mixture for maximum RPM.
3. Reduce throttle to RPM for continued ground operations (800 - 1000 RPM is recommended).

• WARNING •

Fuel flow at full throttle should be at the top of the green arc on the fuel flow gauge.

• NOTE •

If further ground operations will be required after the Before Takeoff Checklist is completed, lean the mixture again (as described above) until ready for the Takeoff Checklist.

Noise Characteristics/Abatement

The certificated noise levels for the aircraft established in accordance with CFR 36 Appendix G are:

Configuration	Actual	Maximum Allowable
Hartzell 3-blade Propeller, HC-E3YR-1RF/F7392S-1, Metal	82.9 dB(A)	88.0 dB(A)
Hartzell 3-blade Propeller, 3C1-R919A1/76C03-2, Composite	81.7 dB(A)	88.0 dB(A)

No determination has been made by the Federal Aviation Administration that the noise levels of this airplane are or should be acceptable or unacceptable for operation at, into, or out of, any airport. The above noise levels were established at 3150 pounds takeoff weight and 2700 RPM.

The following suggested procedures minimize environmental noise when operating the aircraft.

• **NOTE** •

Do not follow these noise abatement procedures where they conflict with Air Traffic Control clearances or instructions, weather considerations, or wherever they would reduce safety.

1. When operating VFR over noise-sensitive areas, such as outdoor events, parks, and recreational areas, fly not less than 2000 feet above the surface even though flight at a lower level may be allowed.
2. For departure from or approach to an airport, avoid prolonged flight at low altitude near noise-sensitive areas.

Intentionally Left Blank

Section 5: Performance Data

Table of Contents

Introduction 3
Standard Charts 3
Associated Conditions Affecting Performance 3
Temperature Conversion 4
OAT for International Standard Atmosphere (ISA) Condition 5
Pressure Conversion - Inches of Mercury to Millibars 6
Fuel Quantity Conversion - U.S. Gallons to Liters 7
Weight Conversion - Pounds to Kilograms 8
Distance Conversion: Feet to Meters 9
Length Conversion: Inches to Centimeters 10
Airspeed Calibration 11
Normal Static Source 11
Alternate Static Source 12
Altitude Correction 13
Normal Static Source: Primary Flight Display 13
Normal Static Source: Standby Altimeter 14
Alternate Static Source: Primary Flight Display 15
Alternate Static Source: Standby Altimeter 16
Stall Speeds 17
Wind Components 18
Takeoff Distance 19
Takeoff Weight 3150 lb (1429 kg) 19
Takeoff Weight: 2600 lb (1179 kg) 21
Takeoff Climb Gradient 23
Takeoff Rate of Climb 24
Enroute Climb 25
Climb Gradient 25
Enroute Rate Of Climb 26
Enroute Rate of Climb Vs Density Altitude 27
Time, Fuel, & Distance to Climb 28
Cruise Performance 29
Range / Endurance Profile 31
Balked Landing 33
Climb Gradient 33
Balked Landing Rate of Climb 34
Landing Distance 35

Landing Distance - 100% Flaps.....35
Landing Distance Table - Flaps 100%.....36
Landing Distance - 50% Flaps.....37
Landing Distance Table - Flaps 50%.....38
Landing Distance - 0% Flaps.....39
Landing Distance Table - Flaps 0%.....40

Introduction

Performance data in this section are presented for operational planning so that you will know what performance to expect from the airplane under various ambient and field conditions. Performance data are presented for takeoff, climb, and cruise (including range & endurance).

All data based on published normal procedures.

Standard Charts

Associated Conditions Affecting Performance

Computed performance data in this section are based upon data derived from actual flight testing with the airplane and engine in good condition and using average piloting techniques. Unless specifically noted in the "Conditions" notes presented with each table, ambient conditions are for a standard day. Flap position as well as thrust setting technique is similarly noted with each table.

The charts in this section provide data over temperature ranges as specified on the chart. If ambient temperature is below the chart value, use the lowest temperature shown to compute performance. This will result in more conservative performance calculations. If ambient temperature is above the chart value, use caution as performance degrades rapidly at higher temperatures.

Serials w/ optional Air Conditioning System: Brake Horsepower is reduced by approximately 6 BHP.

RELATED LINKS:

Refer to "Table 2: Meteorological Terminology" in Section 1: General.

Temperature Conversion

Temp to Convert °C or °F			Temp to Convert °C or °F			Temp to Convert °C or °F		
°C	< >	°F	°C	< >	°F	°C	< >	°F
-50	-58	-72	-17	2	36	17	62	144
-49	-56	-69	-16	4	39	18	64	147
-48	-54	-65	-14	6	43	19	66	151
-47	-52	-62	-13	8	46	20	68	154
-46	-50	-58	-12	10	50	21	70	158
-44	-48	-54	-11	12	54	22	72	162
-43	-46	-51	-10	14	57	23	74	165
-42	-44	-47	-9	16	61	24	76	169
-41	-42	-44	-8	18	64	26	78	172
-40	-40	-40	-7	20	68	27	80	176
-39	-38	-36	-6	22	72	28	82	180
-38	-36	-33	-4	24	75	29	84	183
-37	-34	-29	-3	26	79	30	86	187
-36	-32	-26	-2	28	82	31	88	190
-34	-30	-22	-1	30	86	32	90	194
-33	-28	-18	0	32	90	33	92	198
-32	-26	-15	1	34	93	34	94	201
-31	-24	-11	2	36	97	36	96	205
-30	-22	-8	3	38	100	37	98	208
-29	-20	-4	4	40	104	38	100	212
-28	-18	0	6	42	108	39	102	216
-27	-16	3	7	44	111	40	104	219
-26	-14	7	8	46	115	41	106	223
-24	-12	10	9	48	118	42	108	226
-23	-10	14	10	50	122	43	110	230
-22	-8	18	11	52	126	44	112	234
-21	-6	21	12	54	129	46	114	237
-20	-4	25	13	56	133	47	116	241
-19	-2	28	14	58	136	48	118	244
-18	0	32	16	60	140	49	120	248

OAT for International Standard Atmosphere (ISA) Condition

Press Alt FT	ISA -30 °C		ISA -15 °C		ISA		ISA +15 °C		ISA +30 °C	
	°C	°F	°C	°F	°C	°F	°C	°F	°C	°F
SL	-15	5	0	32	15	59	30	86	45	113
1000	-17	2	-2	29	13	56	28	83	43	110
2000	-19	-2	-4	25	11	52	26	79	41	106
3000	-21	-5	-6	22	9	49	24	76	39	103
4000	-23	-9	-8	18	7	45	22	72	37	99
5000	-25	-13	-10	14	5	41	20	68	35	95
6000	-27	-16	-12	11	3	38	18	65	33	92
7000	-29	-20	-14	7	1	34	16	61	31	88
8000	-31	-23	-16	4	-1	31	14	58	29	85
9000	-33	-27	-18	0	-3	27	12	54	27	81
10,000	-35	-30	-20	-3	-5	24	10	51	25	78
11,000	-37	-34	-22	-7	-7	20	8	47	23	74
12,000	-39	-38	-24	-11	-9	16	6	43	21	70
13,000	-41	-41	-26	-14	-11	13	4	40	19	67
14,000	-43	-45	-28	-18	-13	9	2	36	17	63
15,000	-45	-48	-30	-21	-15	6	0	33	15	60
16,000	-47	-52	-32	-25	-17	2	-2	29	13	56
17,000	-49	-55	-34	-28	-19	-1	-4	26	11	53
17,500	-50	-57	-35	-30	-20	-3	-5	24	10	51

Pressure Conversion - Inches of Mercury to Millibars

Inches Of Mercury	Millibars
28.0	948
28.1	951
28.2	955
28.3	958
28.4	962
28.5	965
28.6	968
28.7	972
28.8	975
28.9	979
29.0	982
29.1	985
29.2	989
29.3	992
29.4	995
29.5	999

Inches Of Mercury	Millibars
29.6	1002
29.7	1006
29.8	1009
29.9	1012
30.0	1016
30.1	1019
30.2	1023
30.3	1026
30.4	1029
30.5	1033
30.6	1036
30.7	1040
30.8	1043
30.9	1046
31.0	1050

Fuel Quantity Conversion - U.S. Gallons to Liters

• NOTE •

Fuel mass provided for reference assuming nominal 6.0 lb/gallon at 59 °F (15 °C).

U.S. Gallons (Liters)	Lb (Kg)
10 (37.9)	60 (27.2)
15 (56.8)	90 (40.8)
20 (75.7)	120 (54.4)
25 (94.6)	150 (68.0)
28 (106.0)	168 (76.2)
30 (113.6)	180 (81.6)

U.S. Gallons (Liters)	Lb (Kg)
35 (132.5)	210 (95.3)
40 (151.4)	240 (108.9)
45 (170.3)	270 (122.5)
50 (189.3)	300 (136.1)
55 (208.2)	330 (150.0)
56 (212.0)	336 (152.4)

Weight Conversion - Pounds to Kilograms

Pounds	Kilograms
2000	907.2
2100	952.5
2200	998.0
2300	1043.3
2400	1088.6
2500	1134.0
2600	1179.3

Pounds	Kilograms
2700	1224.7
2800	1270.1
2900	1315.4
3000	1360.1
3100	1406.1
3150	1428.8

Distance Conversion: Feet to Meters

Feet	Meters
10	3
20	6
30	9
40	12
50	15
60	18
70	21
80	24
90	27
100	30
200	61
300	91
400	122
500	152

Feet	Meters
600	183
700	213
800	244
900	274
1000	305
2000	610
3000	914
4000	1219
5000	1524
6000	1829
7000	2134
8000	2438
9000	2743
10,000	3048

Length Conversion: Inches to Centimeters

Inches	Centimeters
1	2.54
2	5.08
3	7.62
4	10.16
5	12.70
6	15.24
7	17.78
8	20.32
9	22.86
10	25.40
11	27.94
12	30.48

Inches	Centimeters
20	50.8
30	76.2
40	101.6
50	127
60	142.4
70	177.8
80	203.2
90	228.6
100	254
150	381
200	508
250	635

Airspeed Calibration

Normal Static Source

Conditions:

- Power for level flight or maximum continuous, whichever is less.

• **NOTE** •

Indicated airspeed values assume zero instrument error.

KIAS	KCAS Flap Deflection		
	Flaps 0%	Flaps 50%	Flaps 100%
60	57	56	57
70	68	68	70
80	79	80	80
90	89	91	89
100	100	101	99
110	111	111	111
120	121	121	
130	132	131	
140	142	140	
150	152	149	
160	163		
170	173		
180	183		
190	193		
200	203		

Alternate Static Source

Conditions:

- Power for level flight or maximum continuous, whichever is less.
- Heater, Defroster & Vents .....ON

• **NOTE** •

Indicated airspeed values assume zero instrument error.

KIAS	KCAS Flap Deflection		
	Flaps 0%	Flaps 50%	Flaps 100%
60	61	58	54
70	68	66	63
80	77	74	72
90	85	83	82
100	94	92	92
110	103	102	101
120	112	112	110
130	121	122	
140	131	132	
150	141	144	
160	150	155	
170	160		
180	170		
190	179		
200	189		
210	198		

Altitude Correction

Normal Static Source: Primary Flight Display

Conditions:

- Power for level flight or maximum continuous, whichever is less.
- 3150 LB

• **NOTE** •

Add correction to desired altitude to obtain indicated altitude to fly.

Indicated airspeed values assume zero instrument error.

KIAS: Knots Indicated Airspeed.

Flaps	Density Alt	CORRECTION TO BE ADDED (ft)									
		Normal Static Source - KIAS									
		60	70	80	90	100	120	140	160	180	200
0%	S.L.		0	0	0	0	0	0	0	0	0
	5000		0	0	0	0	0	0	0	0	0
	10000		0	0	0	0	0	0	0	0	0
	15000		0	0	0	0	0	0	0	0	0
50%	S.L.		-1	-6	-10	-11	-3	26	81		
	5000		-2	-7	-12	-13	-4	30	94		
	10000		-2	-8	-13	-15	-4	35	110		
100%	S.L.	28	-13	-8	-9	-6	78				
	5000	33	-15	-9	-10	-7	90				
	10000	38	-18	-11	-12	-8	105				

Normal Static Source: Standby Altimeter

Conditions:

- Power for level flight or maximum continuous, whichever is less.
- 3150 LB

• NOTE •

Add correction to desired altitude to obtain indicated altitude to fly.

Indicated airspeed values assume zero instrument error.

KIAS: Knots Indicated Airspeed.

Flaps	Density Alt	CORRECTION TO BE ADDED (ft)									
		Normal Static Source - KIAS									
		60	70	80	90	100	120	140	160	180	200
0%	S.L.		12	9	5	0	-11	-24	-38	-50	-61
	5000		14	10	6	0	-13	-28	-44	-58	-71
	10000		16	12	7	0	-16	-33	-51	-68	-82
	15000		19	14	8	0	-18	-39	-60	-80	-97
50%	S.L.		11	3	-5	-11	-15	1	43		
	5000		12	3	-6	-13	-17	1	50		
	10000		15	4	-7	-15	-20	1	59		
100%	S.L.	14	-1	1	-4	-6	66				
	5000	16	-1	1	-5	-7	77				
	10000	19	-1	1	-5	-8	90				

Alternate Static Source: Primary Flight Display

Conditions:

- Power for level flight or maximum continuous, whichever is less.
- Heater, Defroster & Vents ..... ON

• **NOTE** •

Add correction to desired altitude to obtain indicated altitude to fly.

Indicated airspeed values assume zero instrument error.

KIAS: Knots Indicated Airspeed.

Flaps	Density Alt	CORRECTION TO BE ADDED (ft)									
		Alternate Static Source - KIAS									
		60	70	80	90	100	120	140	160	180	200
0%	S.L.		-2	15	33	52	92	131	170	209	253
	5000		-3	17	39	61	107	152	197	243	294
	10000		-3	20	45	71	125	178	230	283	343
	15000		-4	23	53	83	146	209	270	332	403
50%	S.L.		12	29	47	65	96	114	109		
	5000		14	34	55	75	112	133	127		
	10000		17	40	64	88	130	155	148		
100%	S.L.	43	29	42	54	66	114				
	5000	49	34	49	62	77	132				
	10000	58	40	57	72	90	154				

Alternate Static Source: Standby Altimeter

Conditions:

- Power for level flight or maximum continuous, whichever is less.
- Heater, Defroster & Vents .....ON

• **NOTE** •

Add correction to desired altitude to obtain indicated altitude to fly.

Indicated airspeed values assume zero instrument error.

KIAS: Knots Indicated Airspeed.

Flaps	Density Alt	CORRECTION TO BE ADDED (ft)									
		Alternate Static Source - KIAS									
		60	70	80	90	100	120	140	160	180	200
0%	S.L.		10	24	38	53	81	107	132	159	192
	5000		11	28	44	61	94	124	153	184	223
	10000		13	32	52	71	109	145	179	215	261
	15000		15	38	61	84	128	170	210	252	306
50%	S.L.		24	38	52	65	85	90	71		
	5000		28	44	60	75	98	104	83		
	10000		33	52	70	88	115	122	96		
100%	S.L.	29	41	51	58	67	102				
	5000	33	48	59	68	77	119				
	10000	39	56	69	79	90	139				

Stall Speeds

• NOTE •

KIAS values may not be accurate at stall.

Bank Angle Deg	STALL SPEEDS AT IDLE					
	Flaps UP		Flaps 50%		Flaps 100%	
	KIAS	KCAS	KIAS	KCAS	KIAS	KCAS
3150 lb - Most FWD C.G.						
0	71	69	67	64	62	60
15	72	70	68	66	63	61
30	76	74	71	69	65	64
45	83	82	77	77	71	71
60	98	98	90	91	85	85
3150 lb - Most AFT C.G.						
0	71	69	64	61	60	57
15	72	70	65	62	61	58
30	76	74	68	66	63	61
45	83	82	74	73	68	68
60	98	98	86	86	81	81

Wind Components

Example:

Runway Heading..... 10°
Wind Direction ..... 60°
Wind Velocity ..... 15 Knots

• NOTE •

The maximum demonstrated crosswind is 20 knots.

Figure 5-1: Wind Components

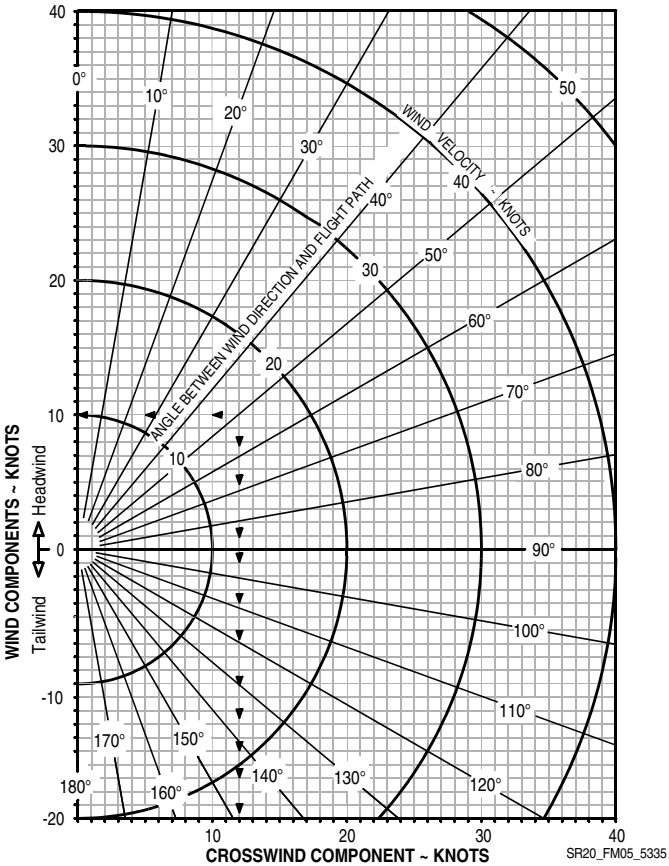

SR20_FM05_5335

Takeoff Distance

Takeoff Weight 3150 lb (1429 kg)

Conditions:

- Winds ..... Zero
- Runway..... Dry, Level, Paved
- Flaps..... 50%
- Air Conditioner ..... OFF
- Power..... Full Throttle
- Speed Over 50 ft Obstacle..... 81 KIAS
- Approximate Speed at Liftoff..... 75 KIAS
- Mixture..... Set Fuel Flow to Very Top of GREEN ARC
  Set prior to brake release for short field takeoff.

The following factors are to be applied to the computed takeoff distance for the noted condition.

Headwind: Subtract 10% for each 12 knots headwind.

Tailwind: Add 10% per each 2 knots tailwind up to 10 knots.

Grass runway, dry: Add 20% of ground roll distance.

Grass runway, wet: Add 30% of ground roll distance.

Uphill gradient: Add the following percentages of the ground roll distance for every 1% of uphill gradient.

- Sea Level (SL): Add 22%
- 5,000 ft: Add 30%
- 10,000 ft: Add 43%

Downhill gradient: Subtract the following percentages of the ground roll distance for every 1% of downhill gradient.

- Sea Level (SL): Subtract 7%
- 5,000 ft: Subtract 10%
- 10,000: Subtract 14%

Aircraft with Air Conditioning System: Add 300 ft to ground roll distance and 400 ft to total distance if Air Conditioner is ON during takeoff.

Takeoff Weight: 3150 lb (1429 kg)								
Press Alt FT	Distance FT	TEMPERATURE ~°C						
		0	10	20	30	40	50	ISA
SL	Gnd Roll	1503	1623	1748	1877	2011	2150	1685
	Total	2273	2443	2618	2799	2986	3179	2530
1000	Gnd Roll	1653	1784	1921	2063	2210	2363	1825
	Total	2491	2675	2867	3065	3270	3482	2732
2000	Gnd Roll	1818	1962	2113	2269	2431	2599	1978
	Total	2730	2932	3142	3359	3584	3817	2953
3000	Gnd Roll	2002	2161	2326	2498	2676	2862	2145
	Total	2995	3217	3447	3686	3932	4187	3195
4000	Gnd Roll	2206	2381	2563	2753	2950	3154	2329
	Total	3288	3532	3785	4048	4319	4599	3460
5000	Gnd Roll	2433	2626	2827	3037	3254	3479	2530
	Total	3614	3883	4161	4449	4747	5055	3749
6000	Gnd Roll	2687	2900	3122	3353	3592	3841	2752
	Total	3976	4272	4578	4895	5224	5563	4066
7000	Gnd Roll	2969	3205	3450	3705	3970	4245	2995
	Total	4379	4705	5042	5392	5754	6127	4414
8000	Gnd Roll	3322	3586	3861	4146	4442	4750	3300
	Total	4883	5246	5622	6013	6416	6833	4851
9000	Gnd Roll	3752	4050	4360	4682	5017	5364	3669
	Total	5495	5904	6328	6767	7221	7691	5380
10,000	Gnd Roll	4240	4577	4927	5291	5670	6062	4082
	Total	6188	6649	7127	7621	8133	8663	5970

Takeoff Weight: 2600 lb (1179 kg)

Conditions:

- Winds ..... Zero
- Runway..... Dry, Level, Paved
- Flaps..... 50%
- Air Conditioner ..... OFF
- Power..... Full Throttle
- Speed Over 50 ft Obstacle..... 75 KIAS
- Approximate Speed at Liftoff..... 69 KIAS
- Mixture..... Set Fuel Flow to Very Top of GREEN ARC
  Set prior to brake release for short field takeoff.

The following factors are to be applied to the computed takeoff distance for the noted condition.

Headwind: Subtract 10% for each 12 knots headwind.

Tailwind: Add 10% per each 2 knots tailwind up to 10 knots.

Grass runway, dry: Add 20% of the ground roll distance.

Grass runway, wet: Add 30% of the ground roll distance.

Uphill gradient: Add the following percentages of the ground roll distance for every 1% of uphill gradient.

- Sea Level (SL): Add 22%
- 5,000 ft: Add 30%
- 10,000 ft: Add 43%

Downhill gradient: Subtract the following percentages of the ground roll distance for every 1% of downhill gradient.

- Sea Level (SL): Subtract 7%
- 5,000 ft: Subtract 10%
- 10,000: Subtract 14%

Aircraft with Air Conditioning System: Add 300 ft to ground roll distance and 400 ft to total distance if Air Conditioner is ON during takeoff.

Takeoff Weight: 2600 lb (1179 kg)								
Press Alt FT	Distance FT	TEMPERATURE ~°C						
		0	10	20	30	40	50	ISA
SL	Gnd Roll	913	986	1061	1140	1221	1305	1023
	Total	1408	1513	1621	1732	1848	1967	1566
1000	Gnd Roll	1004	1083	1166	1252	1342	1435	1108
	Total	1542	1656	1775	1897	2024	2154	1692
2000	Gnd Roll	1104	1192	1283	1378	1476	1578	1201
	Total	1690	1815	1945	2079	2218	2361	1828
3000	Gnd Roll	1215	1312	1412	1517	1625	1738	1303
	Total	1854	1991	2133	2281	2433	2590	1978
4000	Gnd Roll	1339	1446	1556	1671	1791	1915	1414
	Total	2036	2186	2342	2504	2672	2844	2141
5000	Gnd Roll	1477	1595	1717	1844	1975	2112	1536
	Total	2237	2403	2574	2752	2936	3126	2320
6000	Gnd Roll	1631	1761	1896	2036	2181	2332	1671
	Total	2461	2643	2832	3028	3230	3440	2516
7000	Gnd Roll	1803	1946	2095	2250	2411	2577	1818
	Total	2710	2911	3119	3335	3558	3788	2731
8000	Gnd Roll	2017	2178	2344	2518	2697	2884	2004
	Total	3021	3245	3477	3718	3967	4224	3001
9000	Gnd Roll	2278	2459	2647	2843	3046	3257	2228
	Total	3399	3651	3913	4184	4464	4754	3328
10,000	Gnd Roll	2575	2779	2992	3213	3442	3681	2478
	Total	3827	4112	4406	4711	5027	5353	3693

Takeoff Climb Gradient

Conditions:

- Power..... Full Throttle
- Mixture..... Set Fuel Flow to Very Top of GREEN ARC
- Flaps..... 50%

Weight	Press Alt	Climb Speed	CLIMB GRADIENT - Feet per Nautical Mile					
			TEMPERATURE ~°C					
LB	FT	KIAS	-20	0	20	40	50	ISA
3150	SL	88	624	568	517	469	446	529
	2000	87	531	479	431	386	365	452
	4000	86	442	394	349	307	288	377
	6000	86	357	312	270	232	213	305
	8000	85	276	234	196	160	143	236
	10000	84	199	160	124	91	75	169
2600	SL	88	843	775	712	653	626	727
	2000	87	731	668	609	554	529	635
	4000	86	624	565	511	460	436	546
	6000	86	523	468	418	371	348	460
	8000	85	426	376	329	285	264	378
	10000	84	334	288	244	204	185	299

Takeoff Rate of Climb

Conditions:

- Power ..... Full Throttle
- Mixture ..... Set Fuel Flow to Very Top of GREEN ARC
- Flaps 50%

• NOTE •

Aircraft with optional Air Conditioning System: Maximum rate of climb performance is reduced by approximately 75 feet per minute. For maximum climb performance the Air Conditioner should be OFF.

Weight	Press Alt	Climb Speed	RATE OF CLIMB - Feet per Minute					
			TEMPERATURE ~°C					
LB	FT	KIAS	-20	0	20	40	50	ISA
3150	SL	88	862	816	769	721	698	781
	2000	87	752	706	658	610	586	680
	4000	86	643	595	547	498	474	578
	6000	86	533	485	435	386	361	477
	8000	85	423	374	323	273	248	376
	10000	84	313	262	211	160	134	275
2600	SL	88	1159	1109	1056	1003	976	1069
	2000	87	1033	981	928	874	847	952
	4000	86	906	854	800	745	718	835
	6000	86	780	726	671	616	589	718
	8000	85	654	599	543	487	459	602
	10000	84	527	471	415	358	329	486

Enroute Climb

Climb Gradient

Conditions:

- Power..... Full Throttle
- Mixture..... Set Fuel Flow to Very Top of GREEN ARC
- Flaps..... UP

Weight	Press Alt	Climb Speed	CLIMB GRADIENT - Feet per Nautical Mile					
			TEMPERATURE ~°C					
LB	FT	KIAS	-20	0	20	40	50	ISA
3150	SL	97	646	583	526	473	448	540
	2000	96	547	488	435	385	362	458
	4000	95	453	398	348	302	281	380
	6000	94	363	312	266	223	203	305
	8000	94	278	231	188	148	129	233
	10000	93	198	154	114	77	59	164
	12000	92	122	81	43	9	-7	98
	14000	91	49	11	-24	-56	-71	35
2600	SL	93	857	780	710	645	615	727
	2000	92	737	666	600	540	512	629
	4000	92	623	557	496	440	414	535
	6000	91	516	454	397	345	321	445
	8000	90	414	356	304	255	233	359
	10000	89	317	264	215	170	149	276
	12000	88	226	176	131	89	70	198
	14000	88	140	93	51	12	-6	123

Enroute Rate Of Climb

Conditions:

- Power ..... Full Throttle
- Mixture ..... Set Fuel Flow to Very Top of GREEN ARC
- Flaps ..... UP

• NOTE •

Aircraft with optional Air Conditioning System: Maximum rate of climb performance is reduced by approximately 75 feet per minute if system is ON. For maximum climb performance, the Air Conditioner should be OFF.

Weight	Press Alt	Climb Speed	RATE OF CLIMB - Feet per Minute					
			TEMPERATURE ~°C					
LB	FT	KIAS	-20	0	20	40	50	ISA
3150	SL	97	968	908	849	789	760	864
	2000	96	843	783	723	663	633	750
	4000	95	719	657	596	535	505	636
	6000	94	594	532	469	407	376	522
	8000	94	469	405	341	278	247	408
	10000	93	344	278	212	148	116	294
	12000	92	218	150	83	17	-15	180
	14000	91	91	21	-48	-115	-148	66
2600	SL	97	1279	1211	1143	1075	1041	1160
	2000	96	1133	1065	995	927	893	1026
	4000	95	988	918	848	778	744	893
	6000	94	842	771	699	629	594	760
	8000	94	697	624	551	479	444	627
	10000	93	551	476	402	329	293	494
	12000	92	405	328	252	177	141	362
	14000	91	258	179	101	26	-12	230

Enroute Rate of Climb Vs Density Altitude

Conditions:

- Power..... Full Throttle
- Mixture..... Set Fuel Flow to Very Top of GREEN ARC
- Flaps..... UP

Figure 5-2: Enroute Rate of Climb Vs Density Altitude

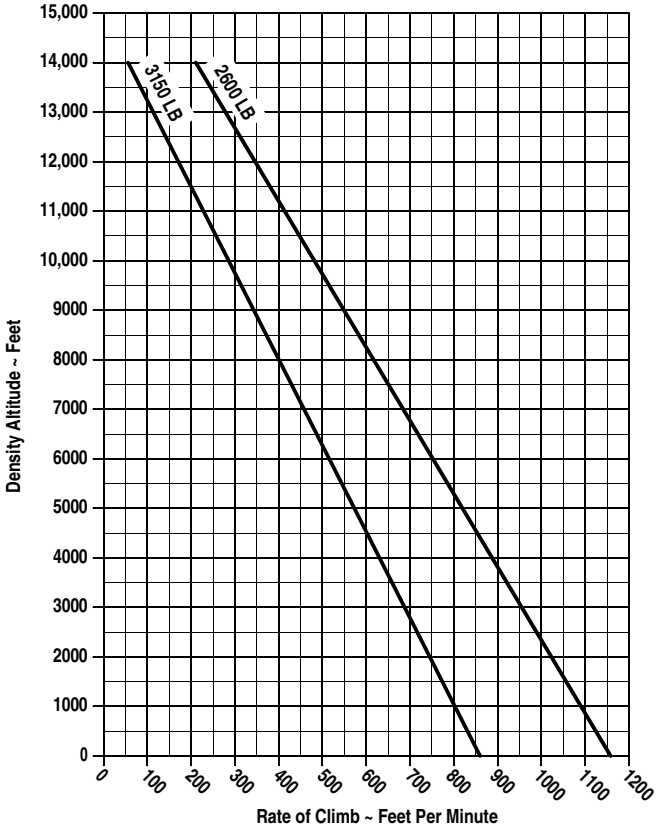

SR20_FM05_5418

Time, Fuel, & Distance to Climb

Conditions:

- Power ..... Full Throttle
- Mixture ..... Set Fuel Flow to Very Top of GREEN ARC
- Weight ..... 3150 LB
- Winds ..... Zero

• NOTE •

Taxi Fuel - Add 1.5 gallon for start, taxi, and takeoff.

Temperature - Add 10% to computed values per each 10 °C above standard.

Press Alt FT	OAT (ISA) °C	Climb Speed KIAS	Rate Of Climb FPM	TIME, FUEL, DISTANCE ~ From Sea Level			
				Time min	Fuel U.S. Gal	Fuel lb	Distance NM
SL	15	97	864	0.0	0.0	0.0	0
1000	13	96	807	1.2	0.4	2.4	2
2000	11	96	750	2.6	0.8	4.8	4
3000	9	95	693	4.0	1.3	7.8	7
4000	7	95	636	5.6	1.7	10.2	9
5000	5	95	579	7.3	2.3	13.8	12
6000	3	94	522	9.2	2.8	16.8	15
7000	1	94	465	11.4	3.4	20.4	19
8000	-1	94	408	13.8	4.1	24.6	23
9000	-3	93	351	16.7	4.8	28.8	28
10000	-5	93	294	20.1	5.7	34.2	35
11000	-7	92	237	24.3	6.8	40.8	42
12000	-9	92	180	29.9	8.2	49.2	52
13000	-11	92	123	38.0	10.1	60.6	67
14000	-13	91	66	53.2	13.6	81.6	96

Cruise Performance

Conditions:

- Mixture..... Target Fuel Flow*
- Weight..... 2600 LB
- Winds ..... Zero
- Shaded Cells: Cruise Pwr above 85% not recommended.

*For power settings greater than 75% power, Best Power.

• NOTE •

Subtract 10 KTAS if nose wheel pant and fairing removed. Lower KTAS by 10% if nose and main wheel pants and fairings are removed.

Aircraft with optional Air Conditioning System: Cruise performance is reduced by 2 knots. For maximum cruise performance, the Air Conditioner should be OFF.

Aircraft with optional Enhanced Vision System: Cruise performance is reduced by up to 1 knot.

Press Alt FT	RPM	MAP	ISA -30 °C			ISA			ISA +30 °C		
			PWR	KTAS	GPH	PWR	KTAS	GPH	PWR	KTAS	GPH
2000	2700	27.1	94%	151	16.5	90%	156	15.8	85%	158	15.2
	2500	27.1	86%	148	14.9	82%	151	14.2	78%	153	13.7
	2500	26.0	81%	145	14.2	77%	148	13.6	73%	150	11.5
	2500	24.9	77%	142	13.5	73%	144	12.3	69%	146	10.9
	2500	23.8	72%	139	13.3	68%	140	11.6	65%	142	10.3
	2500	22.7	67%	135	12.5	64%	136	10.9	61%	138	9.7
	2500	21.6	62%	130	11.7	59%	132	10.3	56%	132	9.1
	2500	20.5	58%	126	11.0	55%	127	9.6	52%	127	8.5
	2500	19.4	53%	121	10.2	50%	121	9.0	48%	121	8.0
4000	2700	25.2	88%	152	15.6	84%	155	14.9	80%	157	14.4
	2500	25.2	80%	147	14.1	76%	150	13.4	73%	152	11.2
	2500	24.1	76%	144	13.4	72%	146	12.0	68%	148	10.6
	2500	23.0	71%	140	13.0	67%	142	11.3	64%	144	10.0
	2500	21.9	66%	136	12.2	63%	138	10.6	60%	139	9.4
	2500	20.8	61%	132	11.4	58%	133	9.9	55%	134	8.8
	2500	19.7	57%	127	10.6	54%	128	9.3	51%	128	8.2
	2500	18.6	52%	121	9.9	49%	122	8.6	47%	122	7.7
	2500	17.5	47%	115	9.1	45%	115	8.0	42%	115	7.1

Press Alt FT	RPM	MAP	ISA -30 °C			ISA			ISA +30 °C		
			PWR	KTAS	GPH	PWR	KTAS	GPH	PWR	KTAS	GPH
6000	2700	23.4	82%	151	14.7	78%	154	14.1	74%	156	11.4
	2500	23.4	75%	146	13.5	71%	148	11.7	68%	150	10.4
	2500	22.3	70%	142	12.7	66%	144	11.0	63%	145	9.7
	2500	21.2	65%	138	11.9	62%	140	10.3	59%	141	9.1
	2500	20.1	60%	133	11.1	57%	135	9.7	55%	136	8.6
	2500	19.0	56%	128	10.3	53%	129	9.0	50%	129	8.0
	2500	17.9	51%	123	9.6	48%	123	8.4	46%	123	7.4
	2500	16.8	46%	116	8.8	44%	116	7.7	42%	115	6.9
8000	2700	21.6	76%	150	13.9	72%	152	11.9	69%	154	10.5
	2500	21.6	70%	144	12.5	66%	146	10.8	63%	148	9.5
	2500	20.5	65%	140	11.6	61%	142	10.1	58%	143	8.9
	2500	19.4	60%	135	10.9	57%	137	9.4	54%	137	8.4
	2500	18.3	55%	130	10.1	52%	131	8.8	50%	131	7.8
	2500	17.2	50%	124	9.3	48%	124	8.1	45%	124	7.2
	2500	16.1	45%	117	8.6	43%	117	7.5	41%	116	6.7
10000	2700	20.0	71%	148	12.7	67%	150	11.0	64%	151	9.7
	2500	20.0	65%	142	11.5	61%	144	10.0	58%	145	8.8
	2500	18.9	60%	138	10.7	56%	139	9.3	54%	139	8.2
	2500	17.8	55%	132	9.9	52%	133	8.6	49%	133	7.6
	2500	16.7	50%	126	9.1	47%	126	8.0	45%	126	7.1
	2500	15.6	45%	119	8.4	43%	118	7.3	41%	117	6.5
12000	2700	18.5	66%	146	11.7	62%	147	10.1	59%	148	8.9
	2500	18.5	60%	140	10.6	57%	141	9.2	54%	142	8.1
	2500	17.4	55%	135	9.8	52%	135	8.5	49%	135	7.5
	2500	16.3	50%	128	9.0	47%	128	7.9	45%	128	6.9
	2500	15.2	45%	121	8.3	43%	120	7.2	40%	119	6.4
14000	2700	17.1	61%	143	10.8	57%	144	9.3	54%	145	8.2
	2500	17.1	55%	137	9.8	52%	138	8.5	50%	138	7.5
	2500	16.0	50%	131	9.0	48%	131	7.8	45%	130	6.9
	2500	14.9	45%	123	8.2	43%	123	7.1	41%	121	6.3

Range / Endurance Profile

Conditions:

- Weight ..... 3000 LB
- Temperature ..... Standard Day
- Winds ..... Zero
- Mixture ..... See Tables
- Total Fuel ..... 56 Gallons

• NOTE •

Fuel Remaining For Cruise accounts for 10.1 gallons for 45 minutes IFR reserve fuel at 75% power and fuel burn for descent.

Range and endurance shown includes descent to final destination at 160 KIAS and 500 fpm.

Range is decreased by 5% if nose wheel pant and fairings removed.

Range is decreased by 15% if nose and main wheel pants and fairings removed.

Aircraft with optional Air Conditioning System: Range is decreased by 1% if system in operation. For maximum range, the Air Conditioner should be OFF.

75% POWER							
Press Alt FT	Climb Fuel GAL	Fuel Remaining For Cruise GAL	Airspeed KTAS	Fuel Flow GPH	Endurance HOURS	Range NM	Specific Range NM/GAL
0	0.0	47.9	144	12.3	3.9	558	11.6
2000	0.8	47.2	146	12.1	3.9	574	12.1
4000	1.7	46.4	149	12.0	3.9	588	12.5
6000	2.8	45.5					
8000	4.1	44.3					
10000	5.7	42.7					
12000	8.2	40.4					
14000	13.6	35.0					

65% POWER							
Press Alt FT	Climb Fuel GAL	Fuel Remaining For Cruise GAL	Airspeed KTAS	Fuel Flow GPH	Endurance HOURS	Range NM	Specific Range NM/GAL
0	0.0	47.9	135	10.9	4.4	596	12.4
2000	0.8	47.2	138	10.7	4.4	613	12.9
4000	1.7	46.4	140	10.5	4.4	629	13.4
6000	2.8	45.5	143	10.3	4.4	643	13.8
8000	4.1	44.3	145	10.2	4.3	655	14.4
10000	5.7	42.7					
12000	8.2	40.4					
14000	13.6	35.0					

55% POWER							
Press Alt FT	Climb Fuel GAL	Fuel Remaining For Cruise GAL	Airspeed KTAS	Fuel Flow GPH	Endurance HOURS	Range NM	Specific Range NM/GAL
0	0.0	47.9	125	9.5	5.1	630	13.2
2000	0.8	47.2	127	9.3	5.1	651	13.7
4000	1.7	46.4	130	9.1	5.1	670	14.2
6000	2.8	45.5	132	9.0	5.1	687	14.8
8000	4.1	44.3	135	8.8	5.0	700	15.3
10000	5.7	42.7	137	8.7	4.9	709	15.8
12000	8.2	40.4	139	8.6	4.7	709	16.3
14000	13.6	35.0					

Balked Landing

Climb Gradient

Conditions:

- Power..... Full Throttle
- Mixture..... Set Fuel Flow to Very Top of GREEN ARC
- Flaps.....100%

• NOTE •

This chart is required data for certification. However, significantly better performance can be achieved by climbing at Best Rate of Climb speeds shown with flaps down or following the Balked Landing/Go-Around procedure in Section 4.

Weight	Press Alt	Climb Speed	CLIMB GRADIENT - Feet per Nautical Mile					
			TEMPERATURE ~°C					
LB	FT	KIAS	-20	0	20	40	50	ISA
3150	SL	78	695	606	526	454	421	546
	2000	78	559	479	407	341	310	438
	4000	78	433	361	295	235	207	337
	6000	78	317	250	190	136	110	241
	8000	78	209	148	93	43	19	151
	10000	78	108	52	2	-44	-65	66
2600	SL	78	940	831	733	644	603	756
	2000	78	773	675	586	506	469	625
	4000	78	619	530	450	377	343	501
	6000	78	477	396	323	257	226	385
	8000	78	345	271	204	144	116	275
	10000	78	223	155	94	39	13	172

Balked Landing Rate of Climb

Conditions:

- Power ..... Full Throttle
- Mixture ..... Set Fuel Flow to Very Top of GREEN ARC
- Flaps 100%

• NOTE •

This chart is required data for certification. However, significantly better performance can be achieved by climbing at Best Rate of Climb speeds shown with flaps down or following the Balked Landing/Go-Around procedure in Section 4.

Weight	Press Alt	Climb Speed	RATE OF CLIMB - Feet per Minute					
			TEMPERATURE ~°C					
LB	FT	KIAS	-20	0	20	40	50	ISA
3150	SL	78	840	763	687	613	577	706
	2000	78	703	626	551	478	442	584
	4000	78	566	490	415	342	306	463
	6000	78	430	353	278	205	169	342
	8000	78	295	217	141	67	31	221
	10000	78	159	80	3	-72	-108	99
2600	SL	78	1130	1040	953	867	825	974
	2000	78	968	879	792	708	667	831
	4000	78	806	718	632	548	507	688
	6000	78	646	558	472	387	346	545
	8000	78	487	398	311	226	184	402
	10000	78	328	237	149	63	21	259

Landing Distance

Landing Distance - 100% Flaps

Conditions:

- Winds ..... Zero
- Runway..... Dry, Level, Paved
- Weight ..... 3150 lb (1429 kg)
- Power..... Idle
- Speed Over Obstacle..... 79 KIAS

The following factors are to be applied to the computed landing distance for the noted condition.

Headwind: Subtract 10% for each 13 knots headwind.

Tailwind: Add 10% per each 2 knots tailwind up to 10 knots.

Grass Runway, Dry: Add 20% of ground roll distance.

Grass Runway, Wet: Add 60% of ground roll distance.

Uphill gradient: Subtract 9% of the ground roll distance for every 1% of uphill gradient.

Downhill gradient: Add 27% of the ground roll distance for every 1% of downhill gradient.

Landing Distance Table - Flaps 100%

Press Alt FT	Distance FT	TEMPERATURE ~°C						
		0	10	20	30	40	50	ISA
SL	Gnd Roll	809	838	868	897	927	957	853
	Total	2557	2609	2663	2717	2773	2829	2636
1000	Gnd Roll	838	869	900	931	961	992	878
	Total	2610	2665	2722	2779	2838	2898	2682
2000	Gnd Roll	870	901	933	965	997	1029	905
	Total	2666	2725	2785	2846	2907	2970	2731
3000	Gnd Roll	902	935	968	1001	1034	1067	932
	Total	2726	2788	2852	2916	2981	3048	2782
4000	Gnd Roll	936	971	1005	1039	1073	1108	960
	Total	2790	2856	2923	2991	3060	3130	2837
5000	Gnd Roll	972	1007	1043	1079	1114	1150	990
	Total	2858	2928	2999	3070	3143	3217	2894
6000	Gnd Roll	1009	1046	1083	1120	1157	1194	1021
	Total	2931	3004	3079	3155	3232	3310	2954
7000	Gnd Roll	1048	1086	1125	1163	1201	1240	1052
	Total	3008	3086	3165	3245	3326	3409	3017
8000	Gnd Roll	1089	1128	1168	1208	1248	1288	1085
	Total	3091	3173	3256	3341	3427	3513	3084
9000	Gnd Roll	1131	1173	1214	1255	1297	1338	1119
	Total	3179	3265	3353	3443	3533	3625	3154
10,000	Gnd Roll	1176	1219	1262	1305	1348	1391	1155
	Total	3272	3364	3457	3551	3646	3743	3228

Landing Distance - 50% Flaps

Conditions:

- Winds ..... Zero
- Runway..... Dry, Level, Paved
- Weight ..... 3150 lb (1429 kg)
- Power..... Idle
- Speed Over Obstacle..... 82 KIAS

The following factors are to be applied to the computed landing distance for the noted condition.

Headwind: Subtract 10% for each 13 knots headwind.

Tailwind: Add 10% per each 2 knots tailwind up to 10 knots.

Grass Runway, Dry: Add 20% of the ground roll distance.

Grass Runway, Wet: Add 60% of the ground roll distance.

Uphill gradient: Subtract 9% of the ground roll distance for every 1% of uphill gradient.

Downhill gradient: Add 27% of the ground roll distance for every 1% of downhill gradient.

Landing Distance Table - Flaps 50%

Press Alt FT	Distance FT	TEMPERATURE ~°C						
		0	10	20	30	40	50	ISA
SL	Gnd Roll	1029	1066	1104	1141	1179	1217	1085
	Total	2704	2768	2833	2899	2966	3033	2800
1000	Gnd Roll	1067	1106	1145	1184	1223	1262	1117
	Total	2768	2836	2904	2974	3044	3115	2856
2000	Gnd Roll	1106	1147	1187	1228	1268	1309	1151
	Total	2837	2908	2980	3053	3127	3202	2915
3000	Gnd Roll	1148	1190	1232	1274	1316	1358	1186
	Total	2909	2984	3060	3137	3216	3295	2977
4000	Gnd Roll	1191	1234	1278	1322	1365	1409	1222
	Total	2987	3066	3146	3227	3309	3392	3042
5000	Gnd Roll	1236	1281	1327	1372	1417	1462	1259
	Total	3069	3152	3236	3322	3408	3496	3111
6000	Gnd Roll	1283	1330	1377	1424	1471	1518	1298
	Total	3156	3243	3332	3422	3513	3605	3183
7000	Gnd Roll	1333	1382	1431	1479	1528	1577	1338
	Total	3248	3340	3434	3529	3624	3721	3258
8000	Gnd Roll	1385	1435	1486	1537	1587	1638	1380
	Total	3346	3443	3542	3642	3742	3844	3338
9000	Gnd Roll	1439	1492	1544	1597	1650	1702	1424
	Total	3450	3553	3656	3761	3867	3974	3421
10,000	Gnd Roll	1496	1550	1605	1660	1715	1769	1469
	Total	3560	3668	3778	3888	4000	4112	3509

Landing Distance - 0% Flaps

Conditions:

- Winds ..... Zero
- Runway ..... Dry, Level, Paved
- Weight ..... 3150 lb (1429 kg)
- Power ..... Idle
- Speed Over Obstacle ..... 87 KIAS

The following factors are to be applied to the computed landing distance for the noted condition.

Headwind: Subtract 10% for each 13 knots headwind.

Tailwind: Add 10% per each 2 knots tailwind up to 10 knots.

Grass Runway, Dry: Add 20% of the ground roll distance.

Grass Runway, Wet: Add 60% of the ground roll distance.

Uphill gradient: Subtract 9% of the ground roll distance for every 1% of uphill gradient.

Downhill gradient: Add 27% of the ground roll distance for every 1% of downhill gradient.

Landing Distance Table - Flaps 0%

Press Alt FT	Distance FT	TEMPERATURE ~°C						
		0	10	20	30	40	50	ISA
SL	Gnd Roll	1185	1228	1272	1315	1358	1402	1250
	Total	2971	3037	3105	3174	3243	3314	3071
1000	Gnd Roll	1229	1274	1319	1364	1409	1454	1287
	Total	3038	3108	3179	3252	3325	3399	3130
2000	Gnd Roll	1274	1321	1368	1414	1461	1508	1326
	Total	3109	3183	3258	3335	3412	3490	3191
3000	Gnd Roll	1322	1371	1419	1467	1516	1564	1366
	Total	3185	3263	3342	3422	3504	3586	3256
4000	Gnd Roll	1372	1422	1472	1523	1573	1623	1408
	Total	3265	3348	3431	3515	3601	3688	3323
5000	Gnd Roll	1424	1476	1528	1581	1633	1685	1451
	Total	3351	3437	3525	3614	3704	3795	3395
6000	Gnd Roll	1479	1533	1587	1641	1695	1749	1495
	Total	3441	3533	3625	3719	3814	3910	3470
7000	Gnd Roll	1536	1592	1648	1704	1760	1817	1542
	Total	3537	3634	3731	3830	3930	4031	3548
8000	Gnd Roll	1595	1654	1712	1770	1829	1887	1590
	Total	3640	3741	3844	3948	4053	4159	3631
9000	Gnd Roll	1658	1718	1779	1840	1900	1961	1641
	Total	3748	3855	3963	4073	4183	4295	3718
10,000	Gnd Roll	1723	1786	1849	1912	1975	2038	1693
	Total	3863	3976	4090	4205	4322	4439	3809

Section 6: Weight and Balance

Table of Contents

Introduction 3
Weight and Balance Record 3
Weight and Balance Data 3
Loading Instructions 4
Weight and Balance Loading Form 5
Loading Data 6
Moment Values 7
Weight & Balance Record 8
Equipment List 8

Intentionally Left Blank

Introduction

This section describes the procedure for calculating the weight and moment for various operations. A comprehensive list of all equipment available for this airplane is included at the back of this section.

It should be noted that specific information regarding the weight, arm, moment, and installed equipment for this airplane as delivered from the factory can be found at the back of this section.

It is the responsibility of the pilot to ensure that the airplane is loaded properly and that all changes to the basic empty weight and center of gravity are recorded.

Figure 6-1: Airplane Weighing

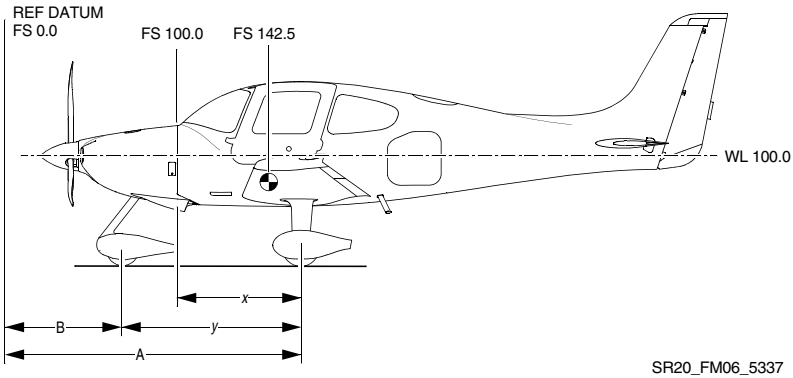

Basic empty weight, moment, and center of gravity are provided in inches aft of datum, where 0 inches datum is 100.0 inches forward of the cabin firewall.

• **NOTE** •

Refer to AMM Chapter 8: Leveling & Weighing for instructions.

Function information on displays do not supersede information in AFM. In the event of conflict, the AFM takes precedence.

Weight and Balance Record

Weight and Balance Data

Refer to “As-Delivered” Weight and Balance Data.

Loading Instructions

It is the responsibility of the pilot to ensure that the airplane is properly loaded and operated within the prescribed weight and center of gravity limits. The following information enables the pilot to calculate the total weight and moment for the loading. The calculated moment is then compared to the Moment Limits chart or table (Figure 6-4) for a determination of proper loading.

Airplane loading determinations are calculated using the Weight & Balance Loading Form (Figure 6-2), the Loading Data chart and table (Figure 6-3), and the Moment Limits chart and table (Figure 6-4).

1. Basic Empty Weight – Enter the current Basic Empty Weight and Moment from the Weight & Balance Record (Figure 6-5).
2. Front Seat Occupants – Enter the total weight and moment/1000 for the front seat occupants from the Loading Data (Figure 6-3).
3. Rear Seat Occupants – Enter the total weight and moment/1000 for the rear seat occupants from the Loading Data (Figure 6-3).
4. Baggage – Enter weight and moment for the baggage from the Loading Data (Figure 6-3).

• **NOTE** •

If desired, subtotal the weights and moment/1000 from steps 1 through 4. This is the Zero Fuel Condition. It includes all useful load items excluding fuel.

5. Fuel Loading – Enter the weight and moment of usable fuel loaded on the airplane from the Loading Data (Figure 6-3).

• **NOTE** •

Subtotal the weight and moment/1000. This is the Ramp Condition or the weight and moment of the aircraft before taxi.

6. Fuel for start, taxi, and run-up – This value is pre-entered on the form. Normally, fuel used for start, taxi, and run-up is approximately 9 pounds at an average moment/1000 of 1.394.
7. Takeoff Condition – Subtract the weight and moment/1000 for step 6 (start, taxi, and run-up) from the Ramp Condition values (step 5) to determine the Takeoff Condition weight and moment/1000.

• **NOTE** •

The total weight at takeoff must not exceed the maximum weight limit of 3150 pounds. The total moment/1000 must not be above the maximum or below the minimum moment/1000 for the Takeoff Condition Weight as determined from the Moment Limits chart or table (Figure 6-4).

Weight and Balance Loading Form

• NOTE •

The Takeoff Condition Weight must not exceed 3150 lb.

The Takeoff Condition Moment must be within the Minimum Moment to Maximum Moment range at the Takeoff Condition Weight. (Refer to Moment Limits).

RELATED TABLE/FIGURE:

For Center of Gravity Envelope, refer to Section 2: Limitations.

Serial Num: .....

Date: .....

Reg. Num: .....

Initials: .....

Figure 6-2: Weight & Balance Loading Form

Item	Description	Weight LB	Moment/1000
1.	Basic Empty Weight Includes unusable fuel & full oil		
2.	Front Seat Occupants Pilot & Passenger (total)		
3.	Rear Seat Occupants		
4.	Baggage Area 130 lb maximum		
5.	Zero Fuel Condition Weight Sub total item 1 thru 4		
6.	Fuel Loading 56 Gallon @ 6.0 lb/gal. Maximum		
7.	Ramp Condition Weight Sub total items 5 and 6		
8.	Fuel for start, taxi, and run-up Normally 9 lb at average moment of 1394		
9.	Takeoff Condition Weight Subtract item 8 from item 7		

Loading Data

Use the following chart or table to determine the moment/1000 for fuel and payload items to complete the Loading Form.

Figure 6-3: Loading Chart

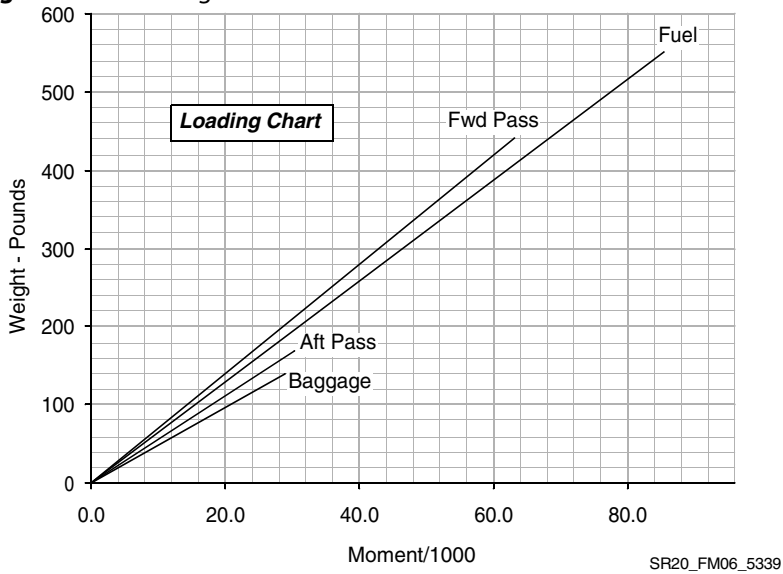

Weight LB	Fwd Pass FS 143.5	Aft Pass FS 180.0	Baggage FS 208.0	Fuel FS 154.9	Weight LB	Fwd Pass FS 143.5	Aft Pass FS 180.0	Fuel FS 154.9
20	2.87	3.60	4.16	3.10	220	31.57	39.60	34.08
40	5.74	7.20	8.32	6.20	240	34.44	43.20	37.18
60	8.61	10.80	12.48	9.29	260	37.31	46.80	40.27
80	11.48	14.40	16.64	12.39	280	40.18	50.40	43.37
100	14.35	18.00	20.80	15.49	300	43.05	54.00	46.47
120	17.22	21.60	24.96	18.59	320	45.92	57.60	49.57
140	20.09	25.20	27.04*	21.69	336**	48.79	61.20	52.05
160	22.96	28.80		24.78	360	51.66	64.80	
180	25.83	32.40		27.88	380	54.53	68.40	
200	28.70	36.00		30.98	400	57.40	72.00	
*130 lb Maximum					**56 U. S. Gallons Usable			

Moment Values

Use the following chart or table to determine if the weight and moment from the completed Weight and Balance Loading Form (Figure 6-2) are within limits.

Figure 6-4: Moment Limits Chart

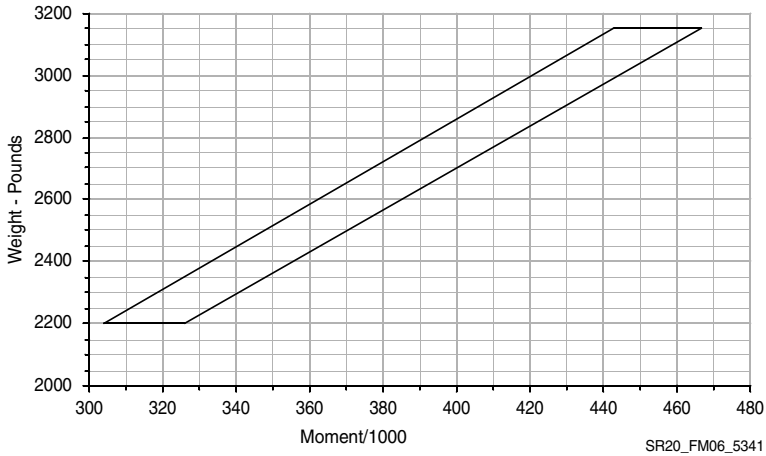

Weight	Moment/1000		Weight	Moment/1000	
LB	Minimum	Maximum	LB	Minimum	Maximum
2200	304	326	2700	375	398
2250	311	333	2750	383	406
2300	318	341	2800	390	414
2350	326	348	2850	398	421
2400	333	354	2900	406	429
2450	340	362	2950	414	437
2500	347	369	3000	421	444
2550	354	375	3050	429	452
2600	362	383	3100	438	459
2650	369	390	3150	445	467

Weight & Balance Record

Use this form to maintain a continuous history of changes and modifications to airplane structure or equipment affecting weight and balance:

Figure 6-5: Weight & Balance Record Form

Serial Num:				Reg. Num:			Page __ of __	
Date	Item No.		Description of Article or Modification	Weight Change Added (+) or Removed (-)			Running Basic Empty Weight	
	In	Out		WT LB	ARM IN.	MOM/ 1000	WT LB	MOM/ 1000
			As-Delivered					

Equipment List

This list will be determined after the final equipment has been installed in the aircraft.

Section 7: Systems Description

Table of Contents

• NOTE •

Content for Section 7: Systems Description is located in the Pilot's Information Manual (PIM).

Intentionally Left Blank

Section 8: Handling and Servicing

Table of Contents

Introduction 3
Operator's Publications 3
Service Publications 3
Obtaining Publications 4
Airplane Records and Certificates 4
Airworthiness Directives 5
Airplane Inspection Periods 5
Annual Inspection 5
100-Hour Inspection 6
Cirrus Progressive Inspection Program 6
Ground Handling 7
Application of External Power 7
Towing 8
Taxiing 9
Parking 9
Tie Down 11
Leveling 11
Jacking 11
Safe Return Autoland Runway Recovery 12
Servicing 13
Landing Gear Servicing 13
Brake Servicing 13
Brake Maintenance 13
Tire Inflation 14
Propeller Servicing 14
Engine Oil Servicing 14
Fuel System Servicing 16
Battery Service 19
Key Fob Battery Replacement 19
ELT Servicing 20
Cleaning Exterior Surfaces 22
Painted Surfaces 22
Exterior Windshield and Windows 22
Enhanced Vision System Sensor Lenses (Optional) 23
Engine Compartment 23
Landing Gear 24

Recommended Exterior Cleaning Products 25
Care of Graphics 26
Cleaning Interior Surfaces 30
Interior Windshield and Windows 30
Instrument Panel and Electronic Display Screens 31
Headliner and Trim Panels 31
Leather Upholstery and Seats 32
Carpets 32

Introduction

This section provides general guidelines for handling, servicing, and maintaining your aircraft. In order to ensure continued safe and efficient operation of your airplane, keep in contact with your Authorized Cirrus Service Center to obtain the latest information pertaining to your aircraft.

Operator's Publications

The FAA Approved Airplane Flight Manual and Airplane Flight Manual (AFM) is provided at delivery. Additional or replacement copies may be obtained from Cirrus.

Service Publications

The following service publications are available for purchase from Cirrus:

- Airplane Maintenance Manual (AMM) – Maintenance Manual divided into chapters as specified by GAMA and ATA covering inspection, servicing, maintenance, troubleshooting, and repair of the airplane structure, systems, and wiring. Revision Service for this manual is also available. A current copy of the AMM is provided at delivery.
- Wiring Manual – Manual covering maintenance, troubleshooting, testing, and repair of the airplane electrical wiring.
- Illustrated Parts Catalog (IPC) – Catalog prepared to aid operators and mechanics to identify and procure replacement airplane parts.
- CAPS Component Maintenance Manual (CMM) – Maintenance Manual with Illustrated Parts List prepared to enable an authorized Cirrus CAPS technician to restore the system to a functional condition.
- Engine Operators and Maintenance Manual – Cirrus provides a Lycoming Engines Operator's and Maintenance Manual at the time of delivery. Engine and engine accessory overhaul manuals can be obtained from the original equipment manufacturer.
- Avionics Component Operator and Maintenance Manuals – Cirrus provides all available operator's manuals at the time of delivery. Maintenance manuals, if available, may be obtained from the original equipment manufacturer.

Cirrus Aircraft publishes Service Bulletins, Service Advisories, and Service Information Letters. Copies can be obtained from Cirrus at www.cirrusaircraft.com.

- Service Bulletins – are of special importance. When a Service Bulletin affecting your plane is published, comply with it promptly.
- Service Advisory Notices – are used to notify you of optional Service Bulletins, supplier Service Bulletins or Service Information Letters affecting your airplane, and maintenance data or corrections not

requiring a Service Bulletin. Pay careful attention to the Service Advisory information.

Obtaining Publications

Airplane Flight Manuals and aircraft service publications can be obtained from Cirrus at www.cirrusaircraft.com,

Airplane Records and Certificates

The Federal Aviation Administration (FAA) requires that certain data, certificates, and licenses be displayed or carried aboard the airplane at all times. Additionally, other documents must be made available upon request. The mnemonic acronym "ARROW" is often used to help remember the required documents.

RELATED TABLE/FIGURE:
Refer to "Table 1: Required Documents".

• NOTE •

Owners of aircraft not registered in the United States should check with the registering authority for additional requirements.

Table 1: Required Documents

Required Documents		Note
A	Airworthiness Certificate FAA Form 8100-2	Must be displayed at all times.
R	Registration Certificate FAA Form 8050-3	Must be in the aircraft for all operations.
R	Radio Station License FCC Form 556	Required only for flight operations outside the United States.
O	Operating Instructions	FAA Approved Airplane Flight Manual and associated aircraft placards fulfill this requirement.
W	Weight & Balance Data	Included in FAA Approved Airplane Flight Manual. Data must include current empty weight, CG, and equipment list.

Other Documents	Note
Airplane Logbook	Must be made available upon request.
Engine Logbook	Must be made available upon request.
Pilot's Checklist	Available in cockpit at all times.

Airworthiness Directives

The Federal Aviation Administration (FAA) publishes Airworthiness Directives (ADs) that apply to specific aircraft and aircraft appliances or accessories. ADs are mandatory changes and must be complied with within a time limit set forth in the AD. Operators should periodically check with Cirrus Service Centers or A&P mechanic to verify receipt of the latest issued AD for their airplane.

Airplane Inspection Periods

• NOTE •

14 CFR 1.1 defines time in service, with respect to maintenance time records, as "the time from the moment an aircraft leaves the surface of the earth until it touches it at the next point of landing."

The Flight hours meter is displayed on the Status & Info synoptic page and should be used for tracking maintenance time intervals.

The inspection items specified in the Annual/100 Inspection have been determined by the average aircraft use rate of the typical owner. Non-commercially operated aircraft that are flown significantly more than 100 hours per year should consider additional inspections commensurate with the hours flown. 100-Hour Inspection or enrollment in a Progressive Inspection Program should be considered in addition to the normally required Annual Inspection. The Annual Inspection interval may also be shortened to accommodate high utilization rate.

Annual Inspection

Unless enrolled in a Progressive Inspection Program, The U.S. Federal Aviation Regulations require all civil aircraft must undergo a thorough Annual Inspection every twelve calendar months. Annual Inspections are due on the last day of the twelfth month following the last Annual Inspection. For example: If an Annual Inspection was performed on 19 November 2015, the next Annual Inspection will be due 30 November 2016. Annual Inspections must be accomplished regardless of the number of hours flown

the previous year and can only be performed by a licensed Airframe and Powerplant (A&P) mechanic holding an Inspection Authorization (IA). Annual inspections can only be performed by facilities approved by Cirrus. The inspection is listed, in detail, in Chapter 5 of the Airplane Maintenance Manual.

100-Hour Inspection

If the airplane is used to carry persons or provide flight instruction for hire, the Federal Aviation Regulations require that the airplane undergo a 100-Hour Inspection every 100 hours of flight operation in addition to the Annual Inspection requirement. The scope of the 100-Hour Inspection is identical to the Annual Inspection, except that it can be accomplished by a licensed A&P mechanic. The 100-hour interval may be exceeded by not more than 10 flight hours in order to reach a place where the inspection can be accomplished. Any flight hours used to reach an inspection station must be deducted from the next 100-Hour Inspection interval. The inspection is listed, in detail, in Chapter 5 of the Airplane Maintenance Manual.

Cirrus Progressive Inspection Program

In lieu of the above requirements, an airplane may be inspected using a Progressive Inspection Program in accordance with the Federal Aviation Regulation Part 91.409(d).

The Cirrus Progressive Inspection Program provides for the complete inspection of the airplane utilizing a five-phase cyclic inspection program.

400 flight hours: A total of eight inspections are accomplished over the course of 400 flight hours, with an inspection occurring every 50 flight hours.

800 flight hours: A total of sixteen inspections are accomplished over the course of 800 flight hours, with an inspection occurring every 50 flight hours.

The inspection items to be covered in the Progressive Inspection are very similar to the Annual Inspection items. The Progressive Inspection will accomplish a full Inspection of the airplane at 400 (or 800) flight hours or at 12 calendar months.

The inspections are listed, in detail, in Chapter 5 of the Airplane Maintenance Manual.

Ground Handling

Application of External Power

An external power receptacle, located just aft of the cowl on the left side of the airplane, permits the use of an external power unit for cold weather starting and maintenance procedures.

• WARNING •

If external power will be used to start engine, keep yourself, others, and power unit cables well clear of the propeller rotation plane.

To Apply External Power to Airplane

• CAUTION •

In accordance with the manufacturer's recommendation, external power should not be used to start the airplane with a dead battery or to charge a dead or weak battery in the airplane. The battery must be removed from the airplane and battery maintenance performed in accordance with the appropriate AMM procedures.

1. Ensure external power unit is regulated to 28 VDC.
2. Verify BAT power switches are set to OFF.
3. Plug external power unit into the receptacle.
4. Set BAT 1 switch to ON. 28 VDC from the external power unit will energize the main distribution and essential distribution buses. The airplane may now be started or electrical equipment operated.

• CAUTION •

If maintenance on avionics systems is to be performed, it is recommended that external power be used.

To Remove External Power from Airplane

1. If battery power is no longer required, set BAT 1 switch 'off.'
2. Pull external power unit plug.

Towing

The airplane may be moved on the ground by the use of the nose wheel steering bar that is stowed in the rear baggage compartment or by power equipment that will not damage or excessively strain the nose gear assembly. The steering bar is engaged by inserting it into lugs just forward of the nose wheel axle.

• CAUTION •

While pushing the aircraft backward, the tow bar must be installed to keep the nose wheel from turning abruptly.

Do not use the vertical or horizontal control surfaces or stabilizers to move the airplane. If a tow bar is not available, use the wing roots as push points.

Do not push or pull on control surfaces or propeller to maneuver the airplane.

Do not tow the airplane when the main gear is obstructed with mud or snow.

If the airplane is to be towed by vehicle, do not turn the nose wheel more than 90 degrees either side of center or structural damage to the nose gear could result.

To Tow Airplane

• CAUTION •

Be especially cognizant of hangar door clearances.

1. Refer to Section 1: General, "Airplane Three View" for turning radius clearances.
2. Insert tow bar into the lugs just forward of the nose wheel axle.
3. Release parking brake.
4. Remove chocks.
5. Move airplane to desired location.
6. Set parking brake in accordance with Parking procedure in this section.
7. Install chocks.
8. Remove tow bar.

To obtain a minimum radius turn during ground handling, the airplane may be rotated around either main landing gear by pressing down on the fuselage just forward of the horizontal stabilizer to raise the nose wheel off the ground.

Taxiing

Before attempting to taxi the airplane, ground personnel should be instructed and authorized by the owner to taxi the airplane. Instruction should include engine starting and shutdown procedures in addition to taxi and steering techniques.

• CAUTION •

Verify that taxi and propeller wash areas are clear before beginning taxi.

Do not operate the engine at high RPM when running up or taxiing over ground containing loose stones, gravel, or any loose material that may cause damage to the propeller blades.

Taxi with minimum power needed for forward movement. Excessive braking may result in overheated or damaged brakes.

To Taxi Airplane

1. Remove chocks.
2. Start engine in accordance with Engine Start procedure.
3. Release parking brake.
4. Advance throttle to initiate taxi. Immediately after initiating taxi, apply the brakes to determine their effectiveness. To ascertain steering effectiveness during taxi, use differential braking to make slight turns.

• CAUTION •

Observe wing clearance when taxiing near buildings or other stationary objects. If possible, station an observer outside the airplane.

Avoid holes and ruts when taxiing over uneven ground.

5. Taxi airplane to desired location.
6. Shut down engine in accordance with Shutdown procedure.
7. Set parking brake in accordance with Parking procedure in this section.
8. Install chocks.
9. In gusty or stormy weather, moor airplane.

Parking

The airplane should be parked to protect the airplane from weather and to prevent it from becoming a hazard to other aircraft. The parking brake may release or exert excessive pressure because of heat buildup after heavy braking or during wide temperature swings. Therefore, if the airplane is to be left unattended or is to be left overnight, chock and tie down the airplane.

If the airplane will be parked for 30 days or more, pull the CONV SYS 1 and CONV SYS 2 circuit breaker to prevent excessive discharge from battery 1.

To Park Airplane

1. Position airplane on level surface and headed into the wind.
2. Retract flaps.

• CAUTION •

Use care if setting parking brake during cold weather when accumulated moisture may freeze brakes, or when brakes are overheated.

3. Set parking brake by first applying brake pressure using the toe brakes and then pulling the PARK BRAKE knob aft.
4. Install chocks.
5. In gusty or stormy weather, tie down airplane in accordance with Tie Down procedure in this section.
6. Install a pitot probe cover.
7. Ensure cabin and baggage doors are locked when the airplane is left unattended.

Tie Down

The airplane should be moored for immovability, security, and protection. FAA Advisory Circular AC 20-35C, Tie-down Sense, contains additional information regarding preparation for severe weather, tie down, and related information.

To Tie Down (Moor) Airplane

1. Position airplane on level surface and headed into the wind.
2. Retract flaps.

• CAUTION •

Do not set parking brake during cold weather, when accumulated moisture may freeze brakes, or when brakes are overheated.

3. Set parking brake in accordance with Parking procedure in this section.
4. Install chocks.
5. Secure tie-down ropes to the wing tie-down rings and to the tail ring at approximately 45-degree angles to the ground. When using rope or non-synthetic material, leave sufficient slack to avoid damage to the airplane should the ropes contract.

• CAUTION •

Anchor points for wing tiedowns should not be more than 18 feet apart to prevent eyebolt damage in heavy winds.

Use bowline knots, square knots, or the midshipman's hitch (also known as a taut line hitch or half-hitch). Do not use plain slip-knots.

Regardless of which tie-down style is employed, ensure that the lines are taut and any slack is eliminated.

Leveling

Refer to AMM Chapter 8: Leveling & Weighing, Weighing the Airplane procedures for instructions and illustration.

Jacking

Refer to AMM Chapter 7: Lifting & Shoring, Jacking the Airplane procedures for list of required tools and for illustration.

Safe Return Autoland Runway Recovery

• NOTE •

Brakes will remain set after emergency automatic landing and after power is removed from aircraft.

Perform the following steps to move the aircraft away from the runway after an emergency automatic landing. Brake reset must be accomplished any time the automatic braking system is activated as part of Safe Return Autoland. Brake reset is not intended for use during flight.

Post-Autoland Aircraft Recovery

1. Evacuate passengers from aircraft.
2. Chock or secure aircraft.
3. Turn off engine ignition by rotating engine knob to OFF position
4. Press red AP DISC button on control yoke.
5. Press green brake reset button located to the right of parking brake for 5 seconds.
6. Set BAT 1, BAT 2, ALT 1, and ALT 2 switches to OFF position.
7. Tow airplane in accordance with Towing procedure in this section.
8. Perform Hard/Overweight Landing procedure in accordance with AMM Chapter 5-50: Unscheduled Maintenance Checks.

Servicing

Landing Gear Servicing

The main landing gear wheel assemblies use 15 x 6.00 x 6 tubeless tires. The nose wheel assembly uses a 5.00 x 5 tubeless tire.

Always keep tires inflated to the rated pressure to obtain optimum performance and maximum service. The landing gear struts do not require servicing. With the exception of replenishing brake fluid, wheel and brake servicing must be accomplished in accordance with AMM procedures.

Brake Servicing

To Replenish Brake Fluid

The brake system is filled with MIL-PRF-87257 hydraulic brake fluid. The fluid level should be checked at every oil change and at the annual/100-hour inspection, replenishing the system when necessary. The brake reservoir is located on the right side of the battery support frame.

• **NOTE** •

If the entire system must be refilled, refer to AMM Chapter 12: Servicing, Brake Fluid Replenishing.

1. Install chocks.
2. Release parking brake.
3. Remove top engine cowling to gain access to hydraulic fluid reservoir.
4. Clean reservoir cap and area around cap before opening reservoir cap.
5. Remove cap and add MIL-PRF-87257 hydraulic fluid as necessary to fill reservoir.
6. Install cap, inspect area for leaks, and then install and secure engine cowling.

Brake Maintenance

The brake assemblies and linings should be checked at every oil change (50 hours) for general condition, evidence of overheating, and deterioration.

The aircraft should not be operated with overheated, damaged, or leaking brakes. Conditions include, but are not limited to:

- Leaking brake fluid at the caliper. This can be observed by checking for evidence of fluid on the ground or deposited on the underside of the wheel fairing. Wipe the underside of the fairing with a clean, white cloth and inspect for red colored fluid residue.
- Overheated components, indicated by discoloration or warping of the disk rotor. Excessive heat can cause the caliper components to discolor or cause yellowing of the part identification label.

Tire Inflation

For maximum service from the tires, keep them inflated to the proper pressure. When checking tire pressure, examine the tires for wear, cuts, nicks, bruises and excessive wear.

To Inflate Tires

1. Open access doors on wheel pants to gain access to valve stems. It may be necessary to move airplane to get valve stem aligned with the access hole.
2. Remove valve stem cap and verify tire pressure with a dial-type tire pressure gauge.

• CAUTION •

The LH and RH main wheel tire pressures must be within 20 psi of each other to ensure the load is evenly distributed between the main wheels.

3. Inflate nose tire to 30 - 35 psi (207 - 241 kPa) and main wheel tires to 60 - 65 psi (414 - 448 kPa).
4. Replace valve stem cap and close access doors.

Propeller Servicing

The spinner and backing plate should be cleaned and inspected for cracks frequently. Before each flight, the propeller should be inspected for nicks, scratches, and corrosion. If found, they should be repaired as soon as possible by a rated mechanic, since a nick or scratch causes an area of increased stress which can lead to serious cracks or the loss of a propeller tip. The back face of the blades should be painted when necessary with flat black paint to retard glare. To prevent corrosion, the surface should be cleaned and waxed periodically.

Refer to the shot peening requirement described in Section 2: Limitations, "".

Engine Oil Servicing

The total oil capacity of the Lycoming Engines IO-390-C3B6 engine is 8 quarts (7.6 liters). The engine oil sump has a capacity of 7 quarts, and the oil filter accounts for an additional 1 quart of the total capacity.

After the first 25 hours of operation, or four months, whichever occurs first, it is required that the oil be changed, the oil filter replaced, and the oil pressure screen be cleaned and inspected, in accordance with the manufacturer's instructions for continued airworthiness.

It is recommended that the oil be changed every 50 hours, or every four months, whichever occurs first, and sooner under unfavorable operating conditions.

Refer to Section 2, Powerplant Limitations, for approved oil grades.

An oil filler cap and dipstick are located at the right rear of the engine and are accessible through an access door on the top right side of the engine cowling.

• CAUTION •

The engine must not be operated with less than six quarts of oil in the sump (dipstick indication). Seven quarts is recommended for extended flights.

To Check and Add Oil

1. Open access door on upper right-hand side of cowl. Pull dipstick and verify oil level.
2. If oil level is below 6 quarts (5.7 liters), remove filler cap and add oil through filler as required to reach 6 - 7 quarts (5.7 - 6.6 liters).
3. Verify oil level and install dipstick and filler cap.
4. Close and secure access panel.

For Engine Break-In

Mineral oil should be used for the first 50 hours of engine operation or until oil consumption stabilizes.
An engine break-in is done to seat the piston rings and stabilize oil consumption.
During the break-in period, it is important to keep the engine temperatures as cool as reasonably possible, while operating at a higher power setting. Engine operation at power settings between 65% and 75% power are recommended. To aid in keeping engine temperatures cool, it is recommended to operate the engine at best power fuel flows or slightly richer for the first 50 hours of engine operation, or until oil consumption stabilizes.

During break-in, make sure the engine is operated at 65% or higher cruise power as much as practical to ensure correct piston ring seating. Cruise power of 75% for the first hour of flight, and alternating power settings between 65% and 75% power for the second hour of flight, is recommended for proper engine break-in. Engine operation below 65% cruise power during engine break-in can cause poor engine performance.
Operate the engine at cruise power at lower altitudes for engine break-in. Density altitude in excess of 8,000 feet (2438 m) will prevent the engine from reaching sufficient cruise power for an acceptable break-in. An altitude of 5,000 feet (1524 m) is recommended.

Fuel System Servicing

Observe all safety precautions required when handling gasoline. Fuel fillers are located on the forward slope of the wing. Each wing holds a maximum of 29.3 U.S. gallons. When using less than the standard 58.5 gallon capacity, fuel should be distributed equally between each side.

• WARNING •

During fueling, have a fire extinguisher available.
Ground fuel nozzle and fuel truck to airplane exhaust pipe and ground fuel truck or cart to suitable earth ground.
Do not fill tank within 100 feet (30.5 meters) of any energized electrical equipment capable of producing a spark.
Smoking or open flames are prohibited within 100 ft (30.5 m) of airplane or refuel vehicle.
Do not operate radios or electrical equipment during refuel operations.
Do not operate any electrical switches.

To Refuel Airplane

• CAUTION •

Aviation grade 100 LL (blue) or 100 (green) fuel is the minimum octane approved for use in this airplane.

1. Place fire extinguisher near fuel tank being filled.
2. Connect ground wire from refuel nozzle to airplane exhaust, from airplane exhaust to fuel truck or cart, and from fuel truck or cart to a suitable earth ground.
3. Place rubber protective cover over wing around fuel filler.

• NOTE •

Do not permit fuel nozzle to come in contact with bottom of fuel tanks. Keep fuel tanks at least half full at all times to minimize condensation and moisture accumulation in tanks. In extremely humid areas, the fuel supply should be checked frequently and drained of condensation to prevent possible distribution problems.

4. Remove fuel filler cap and fuel airplane to desired level.

• NOTE •

If fuel is going to be added to only one tank, the tank being serviced should be filled to the same level as the opposite tank. This will aid in keeping fuel loads balanced.

Refer to Section 2: Limitations, "Fuel" for maximum fuel imbalance information.

5. Remove nozzle, install filler cap, and remove protective cover.
6. Repeat refuel procedure for opposite wing.
7. Remove ground wires.
8. Remove fire extinguisher.

Fuel Filtration Screen/Element

After the first 25 hours of operation, then every 50-hours or as conditions dictate, the fuel filtration screen in the gascolator must be cleaned. After cleaning, a small amount of grease applied to the gascolator bowl gasket will facilitate reassembly.

Refer to AMM Chapter 28: Fuel, Fuel Screen/Element servicing procedures.

Fuel Contamination and Sampling

Typically, fuel contamination results from foreign material such as water, dirt, rust, and fungal or bacterial growth. Additionally, chemicals and additives that are incompatible with fuel or fuel system components are also a source of fuel contamination. To ensure that the proper grade of fuel is used and that contamination is not present, the fuel must be sampled prior to each flight.

Each fuel system drain must be sampled by draining a cupful of fuel into a clear sample cup. Fuel drains are provided for the fuel gascolator, wing tanks, and collector tank drains. The gascolator drain exits the lower engine cowl just forward of the firewall near the airplane centerline. Fuel tank and collector tank drains are located at the low spot in the respective tank.

If sampling reveals contamination, the gascolator and tank drains must be sampled again repeatedly until all contamination is removed. It is helpful to gently rock the wings and lower the tail slightly to move contaminates to the drain points for sampling. If after repeated samplings (three or more), evidence of significant contamination remains, do not fly the airplane until a mechanic is consulted, the fuel system is drained and purged, and the source of contamination is determined and corrected.

If sampling reveals the airplane has been serviced with an improper fuel grade, do not fly the airplane until the fuel system is drained and refueled with an approved fuel grade.

To help reduce the occurrence of contaminated fuel coming from the supplier or fixed based operator, pilots should ensure that the fuel supply has been checked for contamination and that the fuel is properly filtered. Also, between flights, the fuel tanks should be kept as full as operational conditions permit to reduce condensation on the inside of fuel tanks. In extremely humid areas, the fuel supply should be checked frequently and drained of condensation to prevent possible contamination.

De-Fueling

The bulk of the fuel may be drained from the wing fuel tanks by the use of a siphon hose placed in the cell or tank through the filler neck. The remainder of the fuel may be drained by opening the drain valves. Use the same precautions as when refueling airplane. Refer to the AMM for specific procedures.

• **NOTE** •

Refer to AMM Chapter 12: Servicing, Airplane De-Fueling procedures for more information.

Battery Service

The aircraft is delivered with a maintenance-free, rechargeable, sealed, lithium-ion primary battery. Battery #1 is mounted to the bottom right side of the instrument panel and access is gained by removing the lower kick panel. The battery vent is connected to a tube that vents gases overboard.

If Battery #1 is completely discharged the battery must be recharged within 60 days. Failure to recharge the battery will result in permanent depletion and the battery may need to be replaced. Refer to To Recharge Battery # 1.

Battery #2 is a maintenance-free, rechargeable, sealed, lead acid battery. Mounted in the empennage just aft of bulkhead 222, there is no need to check the specific gravity of the electrolyte or add water to these batteries during their service life. Refer to AMM Chapter 5: Time Limits And Maintenance Checks, Overhaul and Replacement Schedule.

The external power receptacle is located on the left side of the fuselage just aft of the firewall. Refer to AMM Chapter 24: Electrical Power, External Power for servicing procedures.

To Recharge Battery # 1

1. Turn BAT 1 and BAT2 switches OFF.
2. Connect appropriately rated ground power.
3. Turn BAT 1 switch ON.
4. Navigate to the Electrical page on the MFD.
5. Verify BAT 1 state of charge begins to increase.
6. Continuing charging battery until state of charge is greater than 75%.
7. Disconnect ground power.

Key Fob Battery Replacement

Serials w/ Convenience Lighting:

If the key fob does not function properly at normal range, the battery should be replaced. To replace the key fob battery:

To Replace Key Fob Battery

1. Using a thin flat object, pry the top and bottom halves of the key fob apart.
2. Remove and replace the battery with a new CR2032, or equivalent, 3-volt battery. Install the new battery with the positive side (+) facing up, away from the circuit board.
3. Press the top and bottom halves of the key fob back together.

ELT Servicing

The ELT batteries must be inspected in accordance with the Airplane Maintenance Manual, 5-20 - Scheduled Maintenance Checks.

The ELT batteries must be replaced upon reaching the date stamped on the batteries, after an inadvertent activation of unknown duration, or whenever the batteries have been in use for one cumulative hour.

Inspection / Test

After setting transmitter switch to TEST position, the ELT automatically enters a self-test mode. The self-test transmits a 406 MHz test coded pulse that monitors certain system functions before shutting off. The test pulse is ignored by any satellite that receives the signal, but the ELT uses this pulse to check output power and frequency. Other parameters of the ELT are checked and a set of error codes is generated if a problem is found. The error codes are indicated by a series of pulses on the transmitter LED, the Remote Switch and Control Panel Indicator (RCPI) LED, and alert buzzer.

• **NOTE** •

FAA regulations require that transmitter tests only be done during the first 5 minutes of each hour and must not last for more than 3 audio sweeps (1.5 seconds). If you are at a location where there is an FAA control tower or other monitoring facility, notify the facility before beginning the tests. Never activate the ELT while airborne for any reason.

Operators may wish to use a low quality AM broadcast receiver to determine if energy is being transmitted from the antenna. When the antenna of the radio (tuning dial on any setting) is held about 6 inches from the activated ELT antenna, the ELT aural tone will be heard on the AM broadcast receiver. This is not a measured check, but it does provide confidence that the antenna is radiating sufficient power to aid search and rescue. The aircraft's VHF receiver, tuned to 121.5 MHz, may also be used. This receiver, however, is more sensitive and could pick up a weak signal even if the radiating ELT's antenna is disconnected. Therefore, it does not check the integrity of the ELT system or provide the same level of confidence as does an AM radio.

To Service ELT

1. Tune aircraft receiver to 121.5 MHz.
2. Push switch lever to TEST position for approximately 1 second, and then release.
3. Results of the test are displayed by a series of indications (flash codes), where the local LED, remote switch LED and buzzer(s) activate for ½ second ON, followed by ½ second OFF. Error codes, indicated by

multiple flashes separated by 1-second periods, will begin to display after approximately 1 second.

4. Flash Codes displayed with the associated conditions are as follows:
   a. 1-Flash: Indicates that the system is operational and that no error conditions were found.
   b. 2-Flashes: Not used. If displayed, correct condition before further flight.
   c. 3-Flashes: Not used. If displayed, correct condition before further flight.
   d. 4-Flashes: Indicates low output power. If displayed, correct condition before further flight.
   e. 5-Flashes: Indicates no position data present. If displayed, correct condition before further flight.

• NOTE •

BAT1 must be powered on to provide position data to the ELT.

   f. 6-Flashes: Indicates G-switch loop is not present. If displayed, correct condition before further flight.
   g. 7-Flashes: Battery check. If displayed, correct condition before further flight.
   h. 8-Flashes: Indicates programming data missing. If displayed, correct condition before further flight.

Cleaning Exterior Surfaces

• CAUTION •

Prior to cleaning, place the airplane in a shaded area to allow the surfaces to cool.

The airplane should be washed with a mild soap and water. Harsh abrasives or alkaline soaps or detergents could make scratches on painted or plastic surfaces or could cause corrosion of metal. Cover static ports and other areas where cleaning solution could cause damage. Be sure to remove the static port covers before flight.

Painted Surfaces

• NOTE •

Any good silicone-free automotive wax may be used to preserve painted surfaces. Soft cleaning cloths or a chamois should be used to prevent scratches when cleaning or polishing. A heavier coating of wax on the leading surfaces will reduce the abrasion problems in these areas.

To Clean Painted Surfaces

1. Flush away loose dirt with water.
2. Apply cleaning solution with a soft cloth, a sponge, or a soft bristle brush.
3. To remove exhaust stains, allow the solution to remain on the surface longer.
4. To remove stubborn oil and grease, use a cloth dampened with naphtha.
5. Rinse all surfaces thoroughly.

Exterior Windshield and Windows

Before cleaning an acrylic window, rinse away all dirt particles before applying cloth or chamois. Never rub dry acrylic. Dull or scratched window coverings may be polished using a special acrylic polishing paste.

• CAUTION •

Clean acrylic windows with a solvent-free, non-abrasive, antistatic acrylic cleaner. Do not use gasoline, alcohol, benzene, carbon tetrachloride, thinner, acetone, or glass window cleaning sprays.

Use only a non-abrasive cotton cloth or genuine chamois to clean acrylic windows. Paper towel or newspaper are highly abrasive and will cause hairline scratches.

To Clean Exterior Windshield and Windows

1. Remove grease or oil using a soft cloth saturated with kerosene then rinse with clean, fresh water.

• NOTE •

Wiping with a circular motion can cause glare rings. Use an up and down wiping motion on the windshield in the direction of the airflow to prevent this.

To prevent scratching from dirt that has accumulated on the cloth, fold cloth to expose a clean area after each pass.

2. Using a moist cloth or chamois, gently wipe the windows clean of all contaminants.
3. Apply acrylic cleaner to one area at a time, then wipe away with a soft, cotton cloth.
4. Dry the windows using a dry non-abrasive cotton cloth or chamois.

Enhanced Vision System Sensor Lenses (Optional)

The Enhanced Vision System Sensor is located on the underside of the LH wing. The three sensor lenses are made of Germanium. In contrast to visible light energy, infrared energy typically passes through dirt on the lens. As such, the Sensor lenses require only occasional cleaning.

• CAUTION •

If an EVS Sensor Lens breaks, use gloves and masks when handling broken Germanium lens material.

Do not use abrasive cleansers or cleaning pads on the germanium lens. Abrasive cleaning can damage the sensor lens coating.

Do not use any cleansers containing ammonia. Ammonia will remove the sensor lens coating.

To Clean EVS Sensor Lenses

1. Apply mild liquid soap and water or isopropyl alcohol, then wipe away with a soft, cotton cloth.
2. Dry the sensor lenses using a dry non-abrasive cotton cloth.

Engine Compartment

Before cleaning the engine compartment, place a strip of tape on the magneto vents to prevent any solvent from entering these units.

To Clean Engine Compartment

1. Place a large pan under the engine to catch waste.
2. Remove induction air filter and seal off induction system inlet.
3. With the engine cowling removed, spray or brush the engine with solvent or a mixture of solvent and degreaser. In order to remove espe-

cially heavy dirt and grease deposits, it may be necessary to brush areas that were sprayed.

• CAUTION •

Do not spray solvent into the alternator, vacuum pump, starter, or induction air intakes.

4. Allow the solvent to remain on the engine from 5 to 10 minutes. Then rinse engine clean with additional solvent and allow it to dry.

• CAUTION •

Do not operate the engine until excess solvent has evaporated or otherwise been removed.

5. Remove the protective tape from the magnetos.
6. Open induction system air inlet and install filter.
7. Lubricate in accordance with AMM Chapter 12: Servicing.

Landing Gear

Before cleaning the landing gear, place a plastic cover or similar material over the wheel and brake assembly.

To Clean Landing Gear

1. Place a pan under the gear to catch waste.
2. Spray or brush the gear area with solvent or a mixture of solvent and degreaser, as desired. Where heavy grease and dirt deposits have collected, it may be necessary to brush areas that were sprayed, in order to clean them.
3. Allow the solvent to remain on the gear from five to ten minutes. Then rinse the gear with additional solvent and allow to dry.
4. Remove the cover from the wheel and remove the catch pan.
5. Lubricate the gear in accordance with AMM Chapter 12: Servicing.

Recommended Exterior Cleaning Products

Cleaning Application	Cleaning Product	Supplier
Painted Exterior	Pure Carnauba Wax	Any Source
	Mothers California Gold Pure Carnauba Wax	Mothers Polish
	RejeX High Gloss Protective Finish	Corrosion Technologies
	WX/Block System	Wings and Wheels
	AeroShell Flight Jacket Plexicoat	Aeroshell
Painted Exterior and Landing Gear	XL-100 Heavy-Duty Cleaner/Degreaser	Buckeye International
Engine Compartment	Stoddard Solvent PD-680 Type ll	Any Source
Exterior Windshield and Windows	Kerosene	Any Source
	Klear-To-Land	D.W. Davies & Co
	Plastic and Glass Cleaner	Prist Aerospace
	Acrylic Polish & Sealant	LP Aero Plastics

Care of Graphics

Graphics require care similar to any fine paint finish. Use high quality products designed specifically for use on automobile finishes. Use products in accordance with the manufacturer's instructions.

Graphics, like paint, are degraded by prolonged exposure to sun and atmospheric pollutants. Store aircraft in a hangar, under a cloth cover, or shaded area whenever possible. Protect aircraft from dew and rain which may contain acidic pollutants (commonly found in large metropolitan areas).

• CAUTION •

If graphics start to discolor or turn brown as a result of exposure to acidic pollution, immediately have a professional remove the graphic from the aircraft to avoid staining the underlying paint.

To Wash and Clean Graphics

Wash graphics whenever the aircraft appears dirty. Contaminants allowed to remain on the exterior may be more difficult to remove.

1. Rinse off as much dirt and grit as possible with a spray of water.
2. Clean graphic with a wet, non-abrasive detergent such as 3M™ Car Wash Soap 39000, Meguiar's NXT Generation® Car Wash, or Deep Crystal® Car Wash, and a soft, clean cloth or sponge.
3. Rinse thoroughly with clean water.
4. To reduce water spotting, immediately use a silicone squeegee to remove water.
5. Dry with a clean microfiber cloth.

To Pressure Wash Graphics

Although hand washing is preferred, pressure washing may be used when necessary to remove dirt and contaminants. Pressure washing must be performed in accordance with the following procedure:

1. Ensure water pressure is less than 2000 psi (14 MPa).
2. Ensure water temperature is less than 180 °F (82 °C).
3. Use a spray nozzle with a 40° wide angle spray pattern.

• CAUTION •

Holding the nozzle of a pressure washer at an angle less than 90° to the graphic may lift the edges of the graphic.

4. Keep the spray nozzle perpendicular to the graphic, and at a distance of at least 1 foot (30 cm).
5. To reduce water spotting, immediately use a silicone squeegee to remove water.
6. Dry with a clean microfiber cloth.

To Spot Clean Difficult Contaminants

Difficult contaminants such as bugs, bird droppings, or tree sap may require spot cleaning.

• CAUTION •

To prevent scratching the graphic, refrain from rough scrubbing and the use of abrasive tools.

1. Soften contaminants by soaking with hot, soapy water for several minutes.
2. Rinse thoroughly with clean water.
3. To reduce water spotting, immediately use a silicone squeegee to remove water.
4. Dry with a clean microfiber cloth.

• CAUTION •

Initially test cleaning products on an inconspicuous area of the graphic to verify they will not cause damage.

5. If further cleaning is needed, one of the following products may be used: Meguiar's Gold Class™ Bug and Tar Remover, 3M™ Citrus Base Cleaner, a mixture of two parts isopropyl alcohol to one part water (mix ratio 2:1), or denatured alcohol.
6. Immediately rinse off all residue with clean water.
7. To reduce water spotting, immediately use a silicone squeegee to remove water.
8. Dry with a clean microfiber cloth.

To Clean Fuel Spills

• CAUTION •

Immediately clean fuel spills to avoid degrading the vinyl and adhesive used in the graphic.

1. Wipe off spilled fuel.
2. Clean graphic with a wet, non-abrasive detergent such as 3M™ Car Wash Soap 39000, Meguiar's NXT Generation® Car Wash, or Deep Crystal® Car Wash, and a soft, clean cloth or sponge.
3. Rinse thoroughly with clean water.
4. To reduce water spotting, immediately use a silicone squeegee to remove water.
5. Dry with a clean microfiber cloth.

Graphic Restoration

If typical cleaning methods fail to produce satisfactory results, refer to the recommended restoration products and mixtures below to help preserve the condition of the graphics on your aircraft.

• CAUTION •

Do not use abrasive polishes or cutting compounds.

Do not use polish or wax on graphics with a matte or texture finish.

Initially test restoration products and mixtures on an inconspicuous area of the graphic to verify they will not cause damage.

• NOTE •

Use an all-purpose cleaner to remove wax or wax residue.

Recommended Graphic Restoration Products and Mixtures

Film or Finish Type	Cleaning Product or Mixture	Supplier
Smooth Gloss	3M™ Perfect-it™ Show Car Paste Wax 39526	3M Company
	Meguiar's Gold Class™ Carnuaba Plus Premium Liquid Wax	Meguiar's
Matte or Satin Texture	Mixture of two parts isopropyl alcohol to one part water (mix ratio 2:1)	Any Source
Matte White (1080-M10) Carbon Fiber White Texture (1080-CF10)	Depending on the type and degree of contamination to be removed, use one or more of the following solutions in the order shown: 1. Hot, soapy water solution 2. Mixture of two parts isopropyl alcohol to one part water (mix ratio 2:1) 3. Simple Green® All-Purpose Cleaner 4. Household chlorine bleach, followed by a mixture of two parts isopropyl alcohol to one part water (mix ratio 2:1) 5. Mineral spirits, followed by a mixture of two parts isopropyl alcohol to one part water (mix ratio 2:1)	Any Source
Carbon Fiber or Brushed Metal Texture	3M™ Tire Restorer	3M Company
	Meguiar's Natural Shine Protectant	Meguiar's
Carbon Fiber Black Texture (1080-CF12)	Meguiar's Ultimate Black Plastic Restorer	Meguiar's

Cleaning Interior Surfaces

Seats, carpet, upholstery panels, and headliners should be vacuumed at regular intervals to remove surface dirt and dust. While vacuuming, use a fine bristle nylon brush to help loosen particles.

• CAUTION •

Remove any sharp objects from pockets or clothing to avoid damaging interior panels or upholstery.

Interior Windshield and Windows

Never rub dry acrylic. Dull or scratched window coverings may be polished using a special acrylic polishing paste.

• CAUTION •

Clean acrylic windows with a solvent-free, non-abrasive, antistatic acrylic cleaner. Do not use gasoline, alcohol, benzene, carbon tetrachloride, thinner, acetone, or glass window cleaning sprays.

Use only a non-abrasive cotton cloth or genuine chamois to clean acrylic windows. Paper towel or newspaper are highly abrasive and will cause hairline scratches.

• NOTE •

Wiping with a circular motion can cause glare rings. Use an up and down wiping motion on the windshield in the direction of the airflow to prevent this.

To prevent scratching from dirt that has accumulated on the cloth, fold cloth to expose a clean area after each pass.

To Clean Interior Windshield and Windows

1. Using a moist cloth or chamois, gently wipe the windows clean of all contaminants.
2. Apply acrylic cleaner to one area at a time, then wipe away with a soft, cotton cloth.
3. Dry the windows using a dry, non-abrasive cotton cloth or chamois.

Instrument Panel and Electronic Display Screens

The instrument panel, control knobs, and plastic trim need only to be wiped clean with a soft, damp cloth. The multifunction display, primary flight display, and other electronic display screens should be cleaned with Optimax - LCD Screen Cleaning Solution as follows:

• CAUTION •

To avoid solution dripping onto display and possibly migrating into component, apply the cleaning solution to cloth first, not directly to the display screen.

Use only a lens cloth or non-abrasive cotton cloth to clean display screens. Paper towels, tissue, or camera lens paper may scratch the display screen.

Clean display screen with power OFF.

To Clean Instrument Panel and Electronic Display Screens

1. Gently wipe the display with a dry, clean, cotton cloth.
2. Moisten clean cotton cloth with cleaning solution.
3. Wipe the soft cotton cloth across the display in one direction, moving from the top of the display to the bottom. Do not rub harshly.
4. Gently wipe the display with a dry, clean cotton cloth.

Headliner and Trim Panels

The airplane interior can be cleaned with a mild detergent or soap and water. Harsh abrasives or alkaline soaps or detergents should be avoided. Solvents and alcohols may damage or discolor vinyl, , or urethane parts. Cover areas where cleaning solution could cause damage.

• CAUTION •

Solvent cleaners and alcohol should not be used on interior parts. If cleaning solvents are used on cloth, cover areas where cleaning solvents could cause damage.

To Clean Headliner and Trim Panels

1. Clean headliner, and side panels, with a stiff bristle brush, and vacuum where necessary.
2. Soiled upholstery, may be cleaned with a good upholstery cleaner suitable for the material. Carefully follow the manufacturer's instructions. Avoid soaking or harsh rubbing.

Leather Upholstery and Seats

For routine maintenance, occasionally wipe leather upholstery with a soft, damp cloth. For deeper cleaning, start with mix of mild detergent and water and, if necessary, work your way up to the products available from Cirrus for more stubborn marks and stains. Do not use soaps as they contain alkaline which will alter the leather's pH balance and cause the leather to age prematurely. Cover areas where cleaning solution could cause damage.

• CAUTION •

Solvent cleaners and alcohol should not be used on leather upholstery.

To Clean Leather Upholstery and Seats

1. Clean leather upholstery with a soft bristle brush, and vacuum where necessary.
2. Wipe leather upholstery with a soft, damp cloth.
3. Soiled upholstery, may be cleaned with the approved products available from Cirrus. Avoid soaking or harsh rubbing.

Carpets

To clean carpets, first remove loose dirt with a whiskbroom or vacuum. For soiled spots and stubborn stains use a non-flammable, dry cleaning fluid. Floor carpets may be cleaned like any household carpet.

Recommended Interior Cleaning Products

Cleaning Application	Cleaning Product	Supplier
Interior Windshield and Windows	Plastic and Glass Cleaner	Prist Aerospace
Display Screens	Optimax	PhotoDon
Cabin Interior	Mild Dishwasher Soap (abrasive-free)	Any Source
Leather Upholstery	Leather Care Kit 50689-001	Hemisphere International
	Leather Cleaner 50684-001	Cirrus
	Ink Remover 50685-001	Cirrus
	Leather Conditioner 50686-001	Cirrus
	Spot and Stain Remover 50687-001	Cirrus
Vinyl Panels	Vinyl Finish Cleaner 50688-001	Cirrus
Vinyl and Leather Upholstery	Vinyl & Leather Cleaner	Sprayway, Inc.

Intentionally Left Blank

Section 9: Log of Supplements

Table of Contents

As Required

FAA Approved AFM Supplements must be in the airplane for flight operations when the subject optional equipment is installed or the special operations are to be performed.

This Log of Supplements shows all Cirrus Supplements available for the aircraft at the corresponding date of the revision level shown in the lower left corner. A check mark in the Part Number column indicates that the supplement is applicable to the AFM. Any installed supplements not applicable to the AFM are provided for reference only.

Section 10: Safety Information

Table of Contents

Introduction 3
Cirrus Airframe Parachute System (CAPS) 3
Deployment Scenarios 4
Mid-Air Collision 4
Structural Failure 4
Loss of Control 4
Landing Required in Terrain not Permitting a Safe Landing 5
Pilot Incapacitation 5
General Deployment Information 6
Deployment Speed 6
Deployment Altitude 6
Deployment Attitude 6
Landing Considerations 7
Emergency Landing Body Position 7
Door Position 7
Water Landings 8
Post-Impact Fire 8
Ground Gusts 8
Safe Return Autoland System (if installed) 9
Activation Scenarios 9
Pilot Incapacitation 10
Other 10
Landing Considerations 10

Intentionally Left Blank

Introduction

This aircraft is designed to operate safely and efficiently in a flight environment. However, like any other aircraft, pilots must maintain proficiency to achieve maximum safety, utility, and economy. Cirrus strongly recommends that all pilots seek regular recurrent training and that they operate in accordance with the Cirrus Flight Operations Manual and Envelope of Safety.

As the pilot, you must be thoroughly familiar with the contents of this manual, the manual Supplements, Flight Checklist, and operational guides and data provided by manufacturers of equipment installed in this airplane. You must operate the airplane in accordance with the applicable FAA operating rules and within the limitations specified in Section 2 of this Manual.

• **NOTE** •

Refer to Section 9: Log of Supplements for applicable FAA operating rules.

The Normal Procedures section of this manual was designed to provide guidance for day-to-day operation of this airplane. The procedures given are the result of flight testing, FAA certification requirements, and input from pilots with a variety of operational experience. Become fully familiar with the procedures, perform all the required checks, and operate the airplane within the limitations and as outlined in the procedures.

Cirrus Airframe Parachute System (CAPS)

The Cirrus Airframe Parachute System (CAPS) is designed to lower the aircraft and its passengers to the ground in the event of a life-threatening emergency. CAPS deployment will likely result in damage to, or loss of, the airframe, and possible injury to the aircraft occupants. Its use should not be taken lightly. Instead, possible CAPS activation scenarios should be well thought out and mentally practiced by every Cirrus pilot. Pilots who regularly conduct CAPS training and think about using CAPS will often have a higher probability of deploying CAPS when necessary.

The following discussion is meant to guide your thinking about CAPS activation. Cirrus also recommends that pilots discuss CAPS deployment scenarios with instructors as well as fellow pilots through forums such as the Cirrus Owners and Pilots Association. In the event of a spin or loss of aircraft control, immediate CAPS activation is required. (See Section 3) In other situations, CAPS activation is at the informed discretion of the pilot in command. The following discussion is intended to be informative, not directive. It is the responsibility of you, the pilot, to determine when and how the CAPS will be used. It is important to understand, however, that numerous fatalities that have occurred in Cirrus aircraft accidents likely could have been avoided if pilots had made the timely decision to deploy

CAPS. It is also important to note that CAPS has been activated by pilots at speeds in excess of 180 knots on multiple occasions with successful outcomes. While the best speed to activate CAPS is below 133 knots indicated airspeed, a timely activation is most important for loss of control situations.

Deployment Scenarios

This section describes possible scenarios in which CAPS activation is appropriate. This list is not intended to be exhaustive, but merely illustrative of the type of circumstances when CAPS deployment could be the most appropriate means of saving the aircraft occupants.

Mid-Air Collision

A mid-air collision likely will render the airplane unflyable by damaging the control system or primary structure. If a mid-air collision occurs, immediately evaluate if the airplane is controllable and structurally capable of continued safe flight and landing. Unless it is apparent that structural and control system damage has not occurred, CAPS activation is recommended. If you are not sure of the condition of the aircraft following a mid-air collision, CAPS activation is recommended.

Structural Failure

Structural failure may result from many situations, such as: encountering severe gusts at speeds above the airplane's structural cruising speed, inadvertent full control movements above the airplane's maneuvering speed, or exceeding the design load factor while maneuvering. If a structural failure occurs, CAPS activation is recommended.

Loss of Control

Loss of control may result from many situations, such as: a control system failure (disconnected or jammed controls); severe wake turbulence, severe turbulence causing upset, severe airframe icing, or pilot disorientation caused by vertigo or panic. If loss of control occurs, the CAPS should be activated immediately.

• WARNING •

In the event of a spin, immediate CAPS activation is mandatory. Under no circumstances should the pilot attempt recovery from a spin other than by CAPS activation.

Landing Required in Terrain not Permitting a Safe Landing

If a forced landing on an unprepared surface is required CAPS activation is recommended unless the pilot in command concludes there is a high likelihood that a safe landing can be accomplished. If a condition requiring a forced landing occurs over rough or mountainous terrain, over water out of gliding distance to land, over widespread ground fog or at night, CAPS activation is strongly recommended. Numerous fatalities that have occurred in Cirrus aircraft accidents likely could have been avoided if pilots had made the timely decision to deploy CAPS.

While attempting to glide to an airfield to perform a power off landing, the pilot must be continuously aware of altitude and ability to successfully perform the landing. Pilot must make the determination by 2000' AGL if the landing is assured or if CAPS will be required.

Pilot Incapacitation

Pilot incapacitation may be the result of anything from a pilot's medical condition to a bird strike that injures the pilot. If incapacitation occurs and the passengers are not trained to land the aircraft, CAPS activation by the passengers is highly recommended. This scenario should be discussed with passengers prior to flight and all appropriate passengers should be briefed on CAPS operation so they could effectively deploy CAPS if required.

Serials w/ Safe Return Autoland: If incapacitation occurs and the passengers are not trained to land the aircraft, passengers should activate Safe Return Autoland. If a red slashed circle (⊘) is illuminated on the Safe Return Autoland activation panel, Safe Return Autoland is unavailable. If Safe Return Autoland is active but cannot safely land the aircraft, the passenger information screen on the MFD will recommend considering CAPS activation. In these scenarios CAPS should be activated by the passengers.

These scenarios should be discussed with passengers prior to flight and all appropriate passengers should be briefed on CAPS operation so they could effectively activate CAPS if required. The CAPS operation briefing should include the following:

- Reference to the passenger briefing card.
- Use of the LVL button.
- Use of the CAPS activation handle.

General Deployment Information

Deployment Speed

The maximum speed at which deployment has been demonstrated is 133 KIAS. Deployment at higher speeds could subject the parachute and aircraft to excessive loads that could result in structural failure. Once a decision has been made to deploy the CAPS, make all reasonable efforts to slow to the minimum possible airspeed. However, if time and altitude are critical, and/or ground impact is imminent, the CAPS should be activated regardless of airspeed.

Deployment Altitude

The altitude loss during a particular deployment depends upon the airplane's airspeed, altitude and attitude at deployment as well as other environmental factors. In all cases, however, the chances of a successful deployment increase with altitude. In the event of a spin, immediate CAPS activation is mandatory regardless of altitude. In other situations, the pilot in command may elect to troubleshoot a mechanical problem or attempt to descend out of icing conditions if altitude and flight conditions permit. If circumstances permit, it is advisable to activate the CAPS at or above 2,000 feet AGL. The minimum recommend altitude for activating CAPS is 600 feet AGL. A low altitude deployment leaves little or no time for the aircraft to stabilize under the canopy or for the cabin to be secured and increases the risk of injury or death. At any altitude, once the CAPS is determined to be the only alternative available for saving the aircraft occupants, deploy the system without delay.

Deployment Attitude

The CAPS has been tested in all flap configurations at speeds ranging from V_{SO} to V_A. Most CAPS testing was accomplished from a level attitude. Deployment from a spin was also tested. From these tests it was found that as long as the parachute was introduced to the free air by the rocket, it would successfully recover the aircraft into its level descent attitude under parachute. However, it can be assumed that to minimize the chances of parachute entanglement and reduce aircraft oscillations under the parachute, the CAPS should be activated from a wings-level, upright attitude if at all possible.

Landing Considerations

After a CAPS deployment, the airplane will descend at less than 1700 feet per minute with a lateral speed equal to the velocity of the surface wind. The CAPS landing touchdown is equivalent to ground impact from a height of approximately 10 feet. While the airframe, seats, and landing gear are designed to accommodate the stress, occupants must be prepared for the landing. The overriding consideration in all CAPS deployed landings is to prepare the occupants for the touchdown in order to protect them from injury as much as possible.

Emergency Landing Body Position

The most important consideration for a touchdown with CAPS deployed is to protect the occupants from injury, especially back injury. Contacting the ground with the back offset attempting to open a door or secure items increases the likelihood of back injury. All occupants must be in the emergency landing body position well before touchdown. After touchdown, all occupants should maintain the emergency landing body position until the airplane comes to a complete stop.

The emergency landing body position is assumed with tightened seat belt and shoulder harness by placing both hands beside the legs, and holding the upper torso erect and against the seat backs. The seat cushions contain an aluminum honeycomb core designed to crush under impact to absorb downward loads and help protect the spine from compression injury.

Door Position

For most situations, it is best to leave the doors latched and use the time available to transmit emergency calls, shut down systems, and get into the Emergency Landing Body Position well before impact. The discussion below gives some specific recommendations, however, the pilot's decision will depend upon all factors, including time to impact, altitude, terrain, winds, condition of airplane, etc.

There is the possibility that one or both doors could jam at impact. If this occurs, to exit the airplane, the occupants will have to force open a partially jammed door or break through a door window using the Emergency Exit Hammer located in the lid of the center armrest. This can significantly delay the occupants from exiting the airplane.

If the pilot elects to touchdown with a door opened, there are several additional factors the pilot must consider: loss of door, possibility of head injury, or injury from an object coming through the open door.

- If a door is open prior to touchdown in a CAPS landing, the door will most likely break away from the airplane at impact.
- If the door is open and the airplane contacts the ground in a rolled condition, an occupant could be thrown forward and strike their head on the exposed door pillar. Contacting the ground in a rolled condition

could be caused by terrain that is not level, contacting an obstacle such as a tree, or by transient aircraft attitude.

- With a door open, it is possible for an object such as a tree limb or flying debris to come through the opening and strike an occupant.

• WARNING •

If it is decided to unlatch a door, unlatch one door only. Opening only one door will provide for emergency egress as well as reduce risks associated with ground contact. Typically, this would be the copilot's door as this allows the other occupants to exit first after the airplane comes to rest.

Water Landings

The ability of the airplane to float after a water landing has not been tested and is unknown. However, since there is the possibility that one or both doors could jam and use of the emergency egress hammer to break out a window could take some time, the pilot may wish to consider unlatching a door prior to assuming the emergency landing body position in order to provide a ready escape path should the airplane begin to sink.

Post-Impact Fire

If there is no fire prior to touchdown and the pilot is able to shut down the engine, fuel, and electrical systems, there is less chance of a post impact fire. If the pilot suspects a fire could result from impact, unlatching a door immediately prior to assuming the emergency landing body position should be considered to assure rapid egress.

Ground Gusts

If known or suspected that ground gusts are present in the landing zone, there is a possibility that the parachute could drag the airplane after touchdown, especially if the terrain is flat and without obstacles. In order to ensure that the occupants can escape the airplane in the timeliest manner after the airplane comes to rest, the pilot may elect to unlatch the copilot's door for the CAPS landing. Occupants must be in the Emergency Landing Body Position for touchdown. Occupants must not loosen seat belts until the airplane comes to rest. When the airplane comes to rest, the occupants should exit the airplane and immediately move upwind to prevent a sudden gust from dragging the airplane in their direction.

Safe Return Autoland System (if installed)

The Safe Return Autoland system is designed to safely land the aircraft in the event of pilot incapacitation. Once activated, it performs the following:

- Declares an emergency and provides periodic status updates
- Selects the closest suitable airport
- Navigates via the most direct route possible while avoiding terrain and undesirable weather if weather information is available for use
- Lands the aircraft, brings it to a stop, and shuts down the engine

• NOTE •

Safe Return Autoland evaluates runway length, width, elevation, gradient, terminal area weather, time to destination, and aircraft fuel state to select a destination.

Safe Return Autoland uses METAR data in determining destination suitability. If METAR data is unavailable, the system may select a less suitable destination.

Safe Return Autoland uses NEXRAD weather information to route around weather. If NEXRAD data is unavailable, the system will be unable to route around weather.

• WARNING •

Safe Return Autoland assumes a fully functional airplane in order to function properly, and is not designed to mitigate system failures. Any system failure that prevents the AFCS or engine from functioning, or the FMS from navigating, will also prevent Safe Return Autoland from functioning. CAPS activation by the passengers should then be used. Other failures including (but not limited to) flaps or radar altimeter, will degrade system performance, and may result in damage to the airframe and possible injury to the occupants.

Because of these conditions and limitations, Safe Return Autoland should only be activated in a true pilot incapacity emergency situation.

Activation Scenarios

This section describes possible scenarios in which Safe Return Autoland activation is appropriate. This list is not intended to be exhaustive, but merely illustrative of the type of circumstances when Safe Return Autoland activation could be the most appropriate means of saving the aircraft occupants.

Pilot Incapacitation

Pilot incapacitation may be the result of anything from a pilot's medical condition to a bird strike that injures the pilot such that he/she can not safely fly and land the airplane. If pilot incapacitation occurs, and no other pilots are on board, passengers should activate the Safe Return Autoland system. If required airplane system functionality is degraded or unavailable, the Safe Return Autoland system will indicate the degraded condition via a red slashed circle (⊘) illuminated on the Safe Return Autoland activation panel or shown on the respective passenger informational screen while Safe Return Autoland is active.

Passengers must be briefed to recognize that, in rare cases, sufficient fuel may be unavailable to reach a suitable runway. This information is provided on the flight display during Safe Return Autoland activation.

In the event that Safe Return Autoland is unavailable, or there is not sufficient fuel to reach the system's target airport once Safe Return Autoland has been activated, CAPS activation by the passengers should then be used. This scenario should be discussed with passengers prior to flight and all appropriate passengers should be briefed on Safe Return Autoland operation so they could effectively activate Safe Return Autoland if required.

The Safe Return Autoland operation briefing should include the following:

- Reference to the passenger briefing card.
- Use of the Safe Return Autoland pushbutton.
- Status indications “system unavailable or degraded” red slashed circle (⊘) to the left of the button, “activated” green landing airplane icon to the right of the button.
- Fuel remaining until landing and estimated time until landing.
- GTC push-to-talk for passenger emergency communications.

Other

Safe Return Autoland activation should be considered any time the pilot is unable to safely fly the aircraft.

Landing Considerations

After a Safe Return Autoland landing, the airplane must be recovered from the runway and inspected for damage due to a potential hard landing.

• NOTE •

The brakes will be locked on until they are reset. Refer to Section 8: Handling and Servicing, "Safe Return Autoland Runway Recovery".